DN SOLUTIONS

5-AXIS VERTICAL MACHINING CENTER

DNM/5AX

DNM 200/5AX
DNM 350/5AX





DNM/5AX series

DNM 5AX series machines are high-performance 5-axis vertical machining centers designed for machining complex parts in single set ups. The machines are easy to use, even for manufacturers with no prior knowledge or experience of 5-axis machining.

CONTENTS

Product Overview

Basic Information

04 Basic Structure
05 Spindle
06 Rotary Table
07 Tool Changer

Detailed Information

08 Standard / Optional Specifications
09 Peripheral Equipment
10 FANUC i PLUS
12 HEIDENHAIN TNC7
13 Power | Torque
13 External Dimensions
15 Table Dimensions
15 Machining Area
16 Machine Specifications

Customer Support Service

17 Why 5-AXIS MACHINING
18 Why DN Solutions
19 Customer Support and Services
19 Global Network



OPTIMIZED COLUMN AND BED DESIGN

High feedrates and ultra high-precision are realized by the machines' optimized column and bed design using 3D simulation modelling.

DIRECTLY COUPLED SPINDLE

Directly-coupled spindles help minimize noise and vibration. Both high-speed and heavy-duty machining can be performed with a single set up.

HIGH-PRECISION TRAVEL SYSTEM

Roller-type LM guideways and high-rigidity couplings have been adopted to ensure excellent stability and the accuracy of the X-, Y-, and Z-axis linear travel system.



BASIC STRUCTURE

High feedrates and precision machining are achieved by the optimized column and bed design.

High-precision machine structure

High-speed cutting and the highest accuracies are achieved as a result of the machine's rigid and precision built structure.

Travel distance (X / Y / Z axis)

DNM 200/5AX
400 (+200, -200) / **435** (+180, -255) / **500** mm
(15.75 (+7.87, -7.87) / 17.13 (+7.09, -10.04) / 19.69 inch)

DNM 350/5AX
400 / 655 / 500 mm
(15.75 / 25.78 / 19.69 inch)

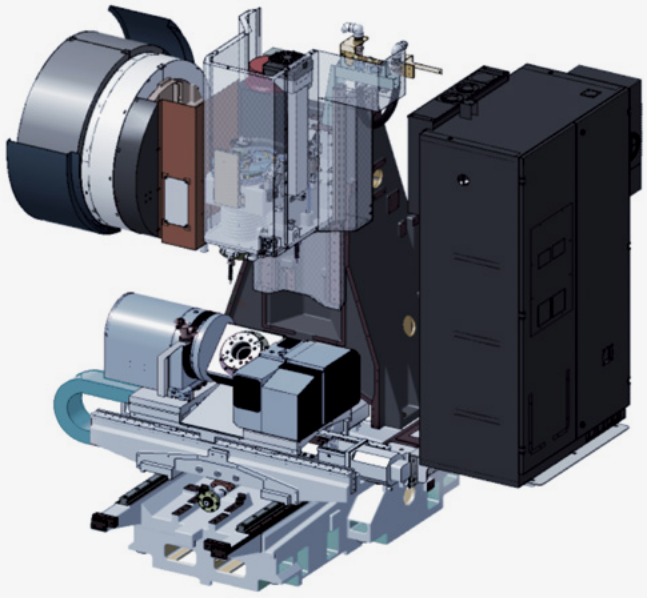

DNM 200/5AX Machine Structure

Axis drive system

The high rigidity and precision of the X-,Y-and Z-axis drive systems are achieved by using Roller-type linear guideways and highly rigid couplings. Speed and accuracy are further enhanced with the nut cooling system which minimizes thermal displacement of the machine's ball screws.

Rapid traverse (X / Y / Z axis)

DNM 200/5AX
36 / 36 / 30 m/min
(1417.3 / 1417.3 / 1181.1 ip)

DNM 350/5AX
36 / 36 / 30 m/min
(1417.3 / 1417.3 / 1181.1 ipm)

Highly-rigid Roller-type linear guideways

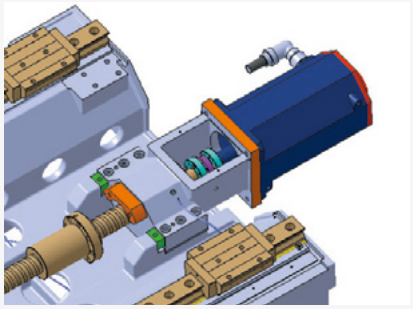

Rigidity and accuracy of the feed system are improved with Roller-type linear guideways and rigid couplings.

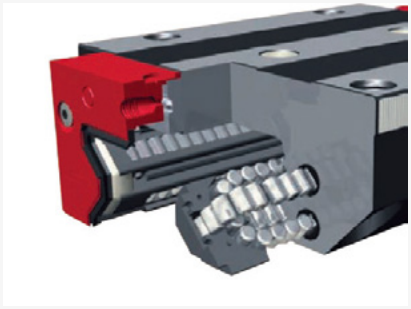

Roller-type linear guideways

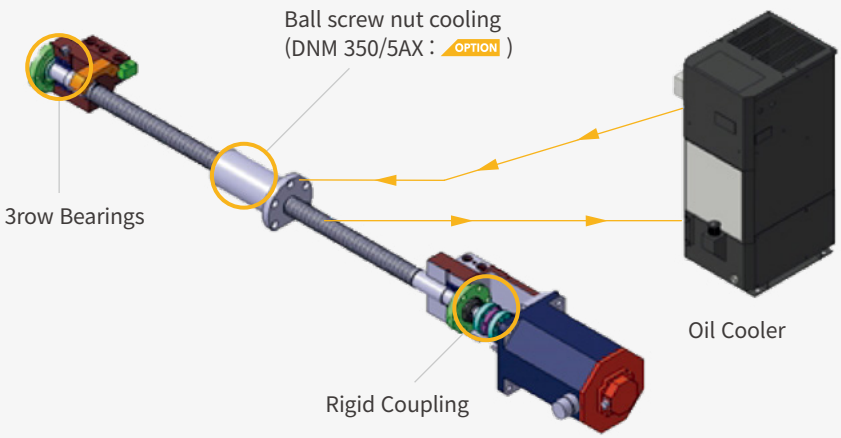

SPINDLE

Directly-coupled spindle head minimizes noise and vibration.

Directly-coupled high precision spindles

Directly-coupled, high precision spindles ensure that high speed and heavy duty cutting can be achieved in single set ups. Machining performance is optimised by minimising vibration and noise, while power loss at high speed is also minimised.

Max. spindle speed

DNM 200/5AX
12000 r/min

DNM 350/5AX
12000 {20000 OPTION} r/min

Spindle motor power
18.5 / 11 kW (24.8 / 14.8 Hp)



Dual contact spindle

Machining performance, cutting tool life and workpiece surface finishes are all improved due to reduced vibrations - a major advantage of the dual contact spindle configuration.

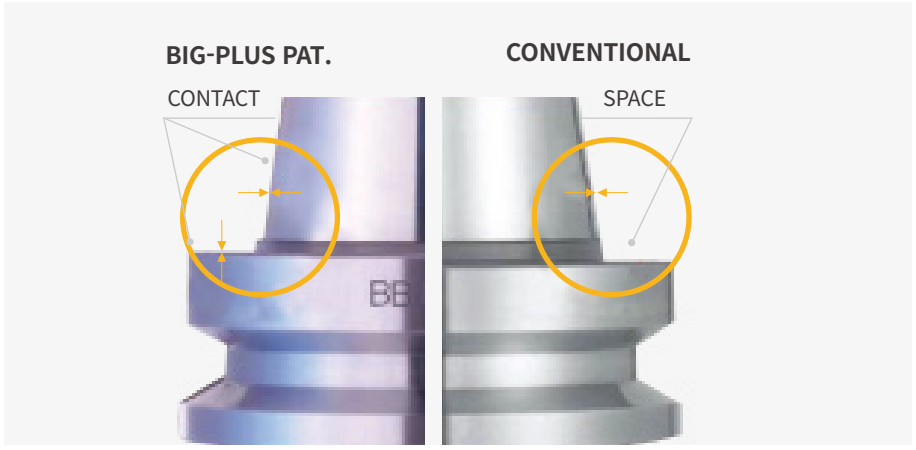

Spindle cooling

A high-accuracy oil cooler helps mitigate heat generated by the bearings and motor and minimizes thermal displacement of the spindle.

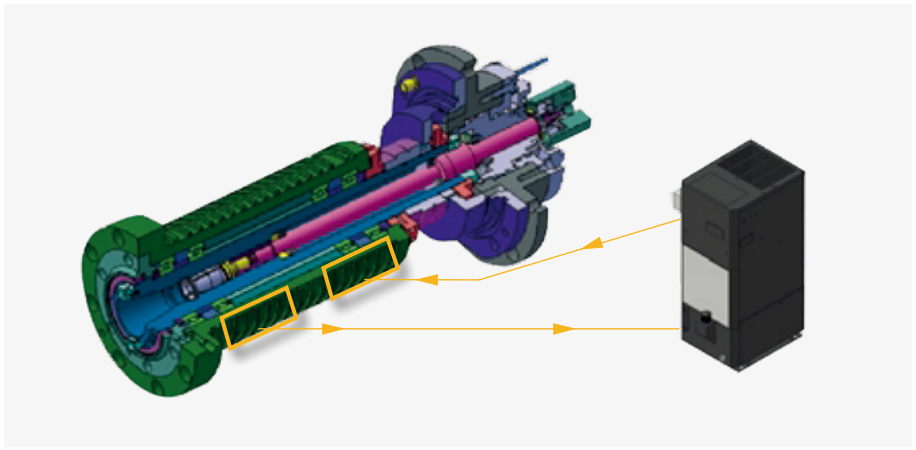

ROTARY TABLE

Wide machining area enables a different sized workpieces to be set up quickly and efficiently.

- Features high-rigidity, high precision axial and radial roller bearings
- Backlash reduced owing to higher structural stability
- A- and C-axes are hydraulically clamped for maximum rigidity

Max. workpiece swing diameter x height

DNM 200/5AX
Ø300 x **200** mm
(Ø11.8 x 7.9 inch)

DNM 350/5AX
Ø400 x **335** mm
(Ø15.7 x 13.2 inch)

Table loading capacity

DNM 200/5AX
60 kg (A-axis 0°) (132.3 lb)

DNM 350/5AX
250 kg (551.1 lb)

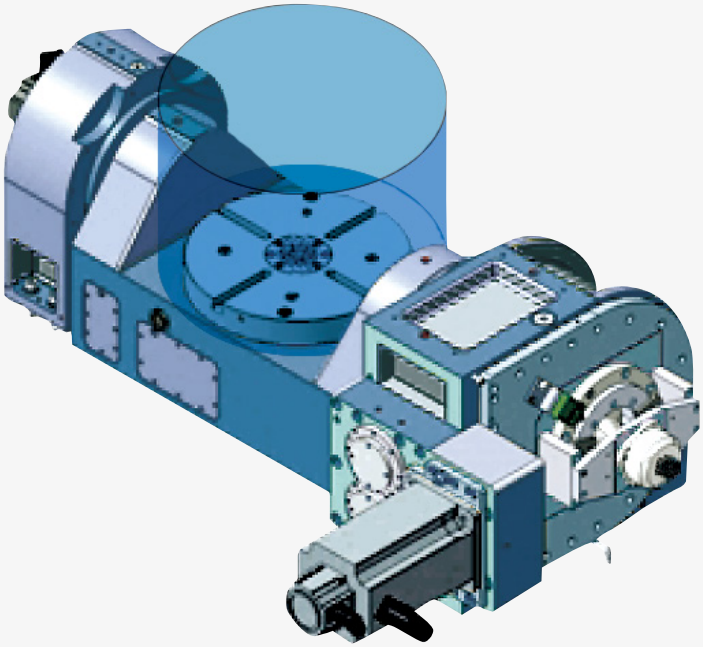

** Actual appearance of the DNM 200/5AX rotary table may differ from the picture to the right.*

Travel distance(A / C axis)

DNM 200/5AX
150 (+30, -120) **/ 360°**

DNM 350/5AX
150 (+30, -120) **/ 360°**

Rapid traverse (A / C axis)

DNM 200/5AX
20 / 30 m/min
(787.4 / 1181.1 ipm)

DNM 350/5AX
20 / 30 m/min
(787.4 / 1181.1 ipm)

Rotary encoder OPTION

** Actual appearance of the DNM 350/5AX rotary table may differ from the picture below.*

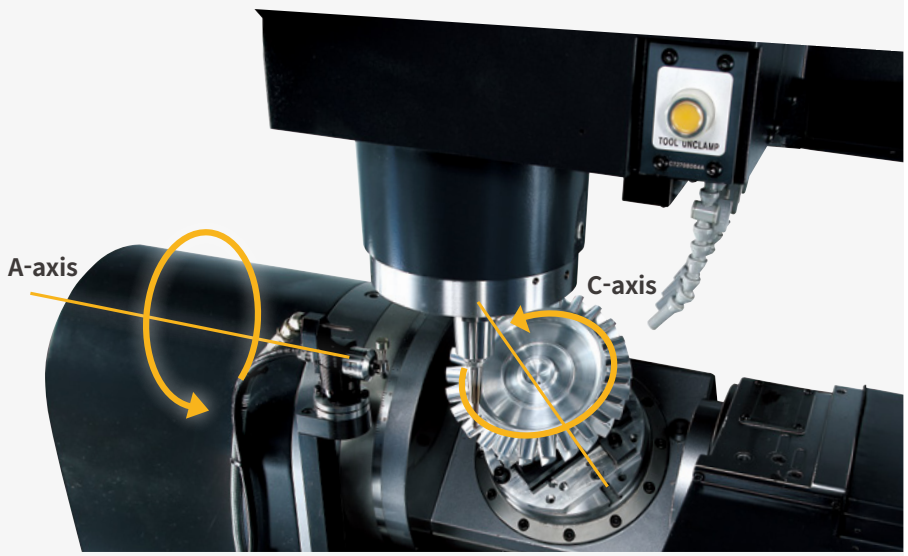

TOOL CHANGER

As well as rapid tool change characteristics (for high productivity), a wide range of different tool magazine options is also available.

Automatic Tool Changer (ATC)

Enhanced productivity is achieved via the CAM-type tool changer that enables faster tool changing to occur.

Tool storage capacity

DNM 200/5AX

30 {40 OPTION} ea

DNM 350/5AX

30 {40 / 60 OPTION} ea

Tool to Tool

1.3 sec



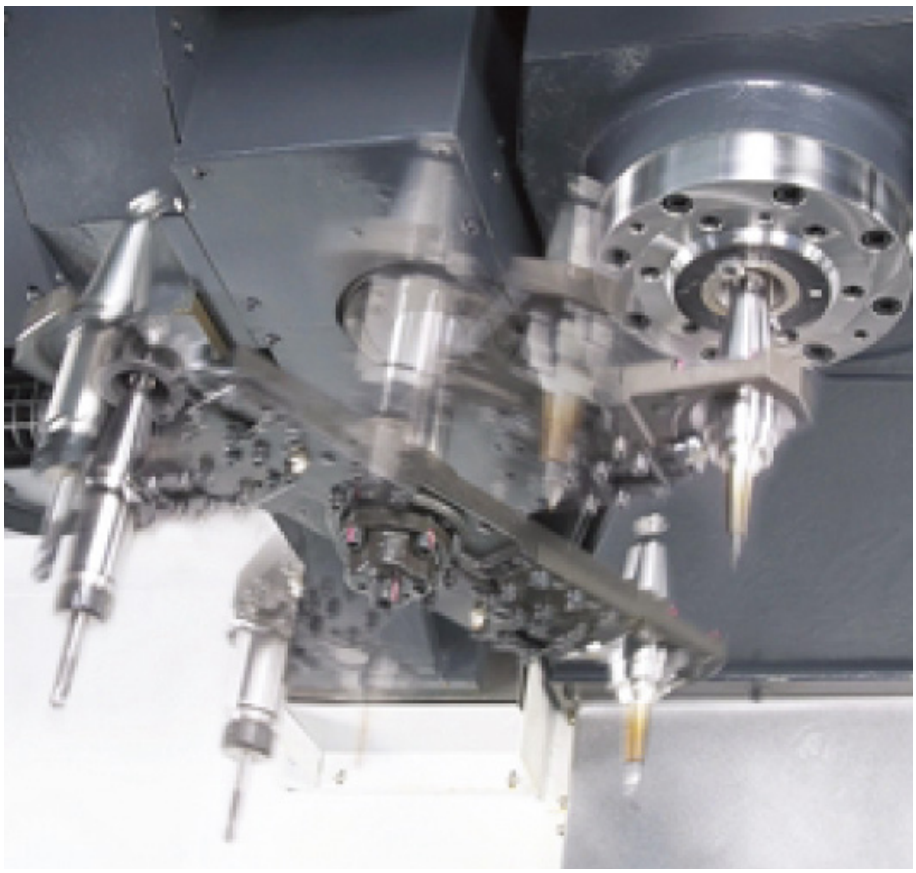

STANDARD | OPTIONAL SPECIFICATIONS

Various optional features are available to meet customers' specific machining requirements and applications.

Description	Features		DNM 200/5AX	DNM 350/5AX
Air blower			○	○
Air gun			○	○
Automatic tool changer	30 Tools		●	●
	40 Tools		○	○
	60 Tools		X	○
Automatic tool measurement	RENISHAW / TS27R- FANUC 31i-5		X	○
	RENISHAW / TS27R - DN Solutions-FANUC i Series		○	○
Automatic workpiece measurement	NONE		●	●
	OMP60_RENISHAW		○	○
Chip conveyor	Hinge / Scraper / Drum filter type		○	○
Coolant gun			○	○
Coolant Tank			●	●
Easy Operation Package	Tool load monitor		●	●
	Alram / M-code / G-code / ATC recovery help		●	●
	Table moving for setup / Easy work coordinate setting		●	●
Electric cabinet air conditioner			○	○
Electric cabinet light			○	○
Electric cabinet line filter			○	○
Linear scale	X Axis		○	○
	Y Axis		○	○
	Z Axis		○	○
MPG	1 MPG_PORTABLE TYPE		●	●
	1 MPG_PORTABLE_W/ENABLE TYPE		○	○
	3 MPG_PORTABLE		○	○
NC System	DN Solutions FANUC i		●	●
	FANUC 31iB5		X	○
	HEIDENHAIN		X	○
NC system lcd size	10.4 inch_FANUC (Color)		●	●
	15.1 inch_HEIDENHAIN (Color)		X	○
Oil Skimmer	Belt Type		○	○
Power transformer			○	○
Shower coolant			○	○
Spindle motor power	18.5 / 11 kW (24.8 / 14.8 Hp)		●	●
	22 / 18.5 kW (29.5 / 24.8 Hp)		X	○
	22 / 11 kW (29.5 / 14.8 Hp)		X	○
Spindle speed	12000 r/min		●	●
	20000 r/min		X	○
Test bar			○	○
Through spindle coolant	NONE		●	●
	1.5 KW_2.0 MPA		○	○
	4.0 KW_2.0 MPA		○	○
	5.5 KW_7.0 MPA_DUAL BAG FILTER		X	○
	7.5KW_7.0 MPA_CYCLONE FILTER		○	X
	Water soluble Coolant Chiller**		○	○
Work & tool counter	WORK / TOOL		○	○
Customized Special Option	Spindle	12K DIRECT_ANALOGE SENSOR TYPE	○	○
		12K DIRECT_HSK63A	○	○
		15K DIRECT_BT-DIN, DIN-DIN	○	○
		20K_BUILT IN SPINDLE_HSK	○	○
	60T ATC		○	○
	Top flushing coolant system		○	○
	Drum chip conveyor		○	○
	Axis cooling system: Nut cooling		○	○
	Auto door (w/Safty edge)		○	○
	IKC (Intelligent kinematic compensation): DCP-i		○	○

※ *Please contact your DN Solutions representative for detailed machine information. .*

● *Standard* ○ *Optional* X *N/A*

* *When using a semi-synthetic type or synthetic type, contact our sales representative or service center in advance.*

** *Technical consultation is mandatory for the chilling of non-water soluble coolant*

⚠ Fire Safety Precautions | There is a high risk of fire when using non-water-soluble cutting fluids, processing flammable materials, neglecting the controlled and careful use of coolants and modifying the machine without the consent of the manufacturer. Always check the SAFETY GUIDELINES carefully before using the machine.

PERIPHERAL EQUIPMENT

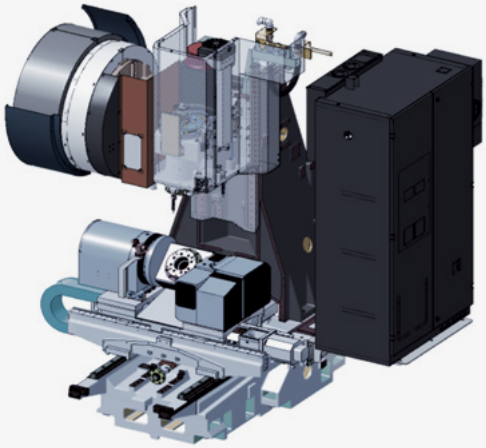

1. Chip conveyor OPTION



Hinge type | Scraper type | Drum filter type

2. Large capacity coolant tank built-in with chip pan and box filter

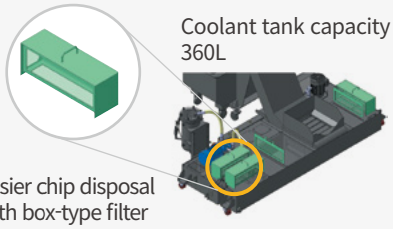

3. Shower coolant OPTION

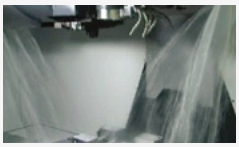

4. Coolant system



5. Auto-door type top cover

The top cover helps enhancing convenience when loading / unloading heavy workpiece on the processing table.

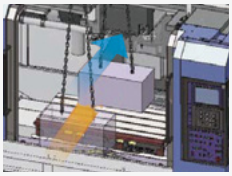

6. Internal screw conveyor



Intelligent Kinematic Compensation for 5-axis

For high accuracy 5-axis machining, Intelligent Kinematic Compensation function is recommended. This function minimizes error in complex 5-axis machining applications by maintaining tip of the tool in correct position in respect to the workpiece. In order to properly utilize this function, following four optional items are required.



Recommended optional items

Software

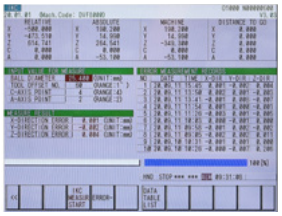

FANUC NC : IKC

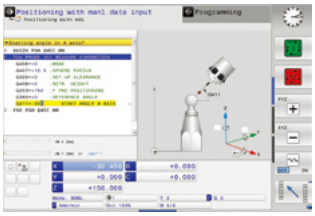

HEIDENHAIN NC ; IKC

Receiver Recommended Option



Touch probe Recommended Option



Datum ball Recommended Option



Auto Tool Measurement Recommended Option



Master tool Recommended Option



FANUC 31i-B PLUS

FANUC 31i-B Plus maximizes customer productivity and convenience.



15" Touch screen + New OP

DN Solutions Fanuc 31iB/B5 Plus' operation panel enhances operating convenience by incorporating common-design buttons and layout. It features a Qwerty keyboard for fast and easy data input and operation.

FANUC 31i-B Plus

- 15-inch color display
- Intuitive and user-friendly design

USB and PCMCIA card QWERTY keyboard

- EZ-Guide i standard
- 4MB Memory
- Enhance AICC BLOCK
- Touch pen provided as standard
- Ergonimic operator panel
- Hot keys

iHMI touchscreen

iHMI provides an intuitive interface that uses a touchscreen for quick and easy operation.

Range of applications

Providing various applications related to planning, machining, improvement and utility, for customer convenience.



NUMERIC CONTROL SPECIFICATIONS

FANUC

Item		Specifications	F31iB5 Plus	0i PLUS
			DNM200/5AX, DNM350/5AX	
Controlled axis	Controlled axes		5 (X,Y,Z,C,A)	5 (X,Y,Z,A,C)
	Simultaneously controlled axes		5 axes	4 axes
	Additional controlled Axis	Add 1 Axis (5th Axis)	○	○
Data input/output	Fast data server		○	○
	Memory card input/output		●	●
	USB memory input/output		●	●
	Large capacity memory(2GB)*2	Available Option only with 15" Touch LCD (iHMI Only) *2)	○	○
Interface function	Embedded Ethernet		●	●
	Fast Ethernet		○	○
	Enhanced Embedded Ethernet function		●	●
Operation	DNC operation	Included in RS232C interface.	●	●
	DNC operation with memory card		●	●
Program input	Workpiece coordinate system	G52 - G59	●	●
	Addition of workpiece coordinate system	G54.1 P1 X 48 (48 pairs)	●	●
	Tool number command		T4 digits	T4 digits
	Tilted working plane indexing command	G68.2 TWP	●	●
Feed function	AI contour control I	G5.1 Q_, 40 Blocks	X	X
	AI contour control II	G5.1 Q_, 200 Blocks	X	●
	AI contour control II	G5.1 Q_, 600 Blocks	X	X
	AI contour control II	G5.1 Q_, 1000 Blocks *1)	●	X
	High smooth TCP		●	X
Operation guidance function	EZ Guidei (Conversational Programming Solution)		●	●
	iHMI with Machining Cycle	Only with 15" Touch LCD standard *2)	X	X
	EZ Operation package		●	●
Setting and display	CNC screen dual display function		●	●
Network	FANUC MTConnect		✪	✪
	FANUC OPC UA		✪	✪
Others	Display unit	10.4" color LCD	X	X
		15" color LCD	X	X
		15" color LCD with Touch Panel	●	●
	Part program storage size & Number of registerable programs	640M(256KB)_500 programs	X	X
		1280M(512KB)_1000 programs	○	X
		2560M(1MB)_1000 programs	○	X
		5120M(2MB)_1000 programs	○	●
		10240M(4MB)_1000 programs	●	X
		20480M(8MB)_1000 programs	○	X
		2560M(1MB)_2000 programs	○	X
		5120M(2MB)_4000 programs	○	X
		10240M(4MB)_4000 programs	○	X
		20480M(8MB)_4000 programs	○	X

*1) The number of look-ahead blocks may be changed or limited depending on the peripheral device or the configuration of the internal NC system.
*2) Available Option only with Fanuc i plus iHMI

Network: FANUC MTConnect and FANUC OPC UA available.
● Standard ○ Optional X N/A ✪ Available

CONVENIENT OPERATION

FANUC 31i-B Plus

EZ work

Tool load monitoring, Setup guide, Status monitoring, Operation and Recovery guide can provide more convenience and efficiency incresing for user operation.

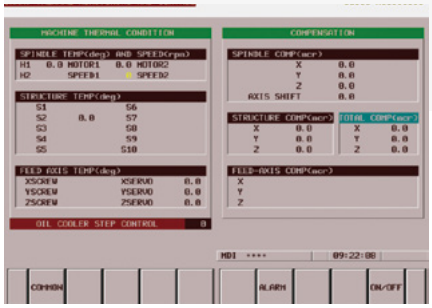

Thermal Compensation

A function to maintain high-precision machining quality by analyzing and correcting the amount of thermal displacement of a structure through a temperature sensor



M/G-Code List

Functional description of M code and G code

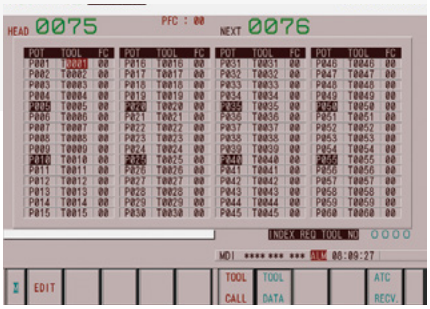

Tool Management

Function to manage tool information [Tool information / Tool No. / Tool condition (normal, large diameter, worn / damaged, used for therst time, manual) / Tool name]



Operation Rate

Machine operation history management function by date based on load

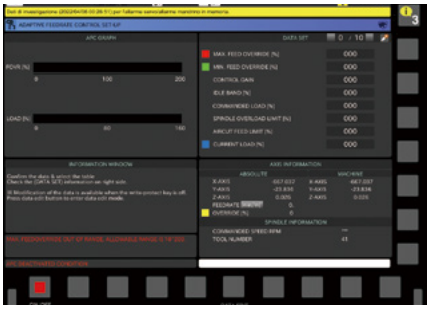

Adaptive Feed Control

Function to control feedrate so that the cutting can be carried out at a constant load

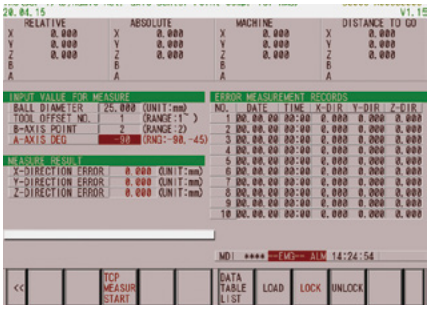

IKC (DCP-I)

The function to compensate the position of the workpiece and the tool tip to be constant regardless of the rotation of the rotating shaft error

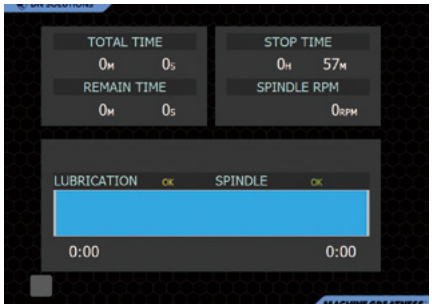

Spindle Warm Up

A function that assists spindle warm-up for spindle life when the spindle has not been used for a certain period of time



ATC Recovery

Function to view detailed info with recommended actions and to perform step-by-step operation manually (when an alarm is triggered during an ATC operation)

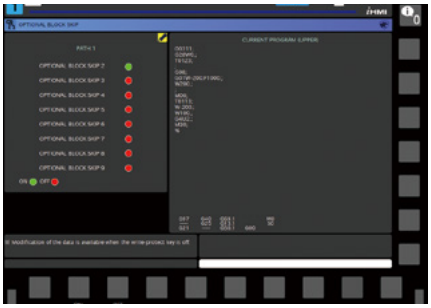

Addition of Optional Block Skip

In addition to the OPTIONAL BLOCK SKIP of the operation panel, the function to skip a specific block selected in the machining program

CONVENIENT OPERATION

HEIDENHAIN TNC7

Visualized, intuitive task support, customized UI

The TNC7 makes machining even easier, for everything from programming to program validation and from machine setup to actual machining. You intuitively operate highly complex applications directly on the touchscreen with various integrated solutions for standard tasks.

TNC7 NEW

- 24 inch touch screen
- 89GB Program memory
- Look-ahead 5000 blocks
- Touch Probe Cycles
  Graphical Programming



<TNC7>

Conversational convenient function



Data are controlled in the folder structure; convenient communication via USB devices



KinematicOpt & KinematicComp (Touch probe cycle for automatic measurement) OPTION

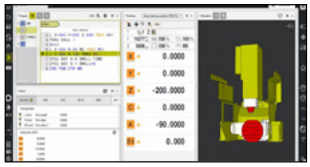

Collision protection system OPTION



Graphic simulation



Various built-in pattern cyclesfor a wider scope of application (Software standard) OPTION



Enhanced collision protection function DCMv2 OPTION



Improved maintenance environment



Highly practical programming and setup based on touch operation

NUMERIC CONTROL SPECIFICATIONS

HEIDENHAIN

Description	Item	Specifications	TNC7
Controlled axis	Controlled axis		5 (X,Y,Z,C,A)
	Simultaneously controlled axis		5 axes
Interface function	Embedded ethernet		●
	USB interface (USB 2.0)		●
Feed function	Look-ahead	5000 blocks	●
Axis compensation	KinematicsOpt	Automatic measurement and optimization of machine kinematics	●
Collision monitoring	Dynamic collision monitoring (DCM)		●
Network	MT Connect		✪
Others	Display unit	touch panel	24"
	Program memory for NC programs		189GB

● *Standard* ○ *Optional* *X N/A* ✪ *Available*

POWER | TORQUE

DNM 200/5AX · 350/5AX

Max. spindle speed

12000 r/min

Max. spindle power

18.5 / 11 kW
(24.8/14.8 Hp)

Max. spindle torque

117.8 N·m
(86.9 ft-lbs)

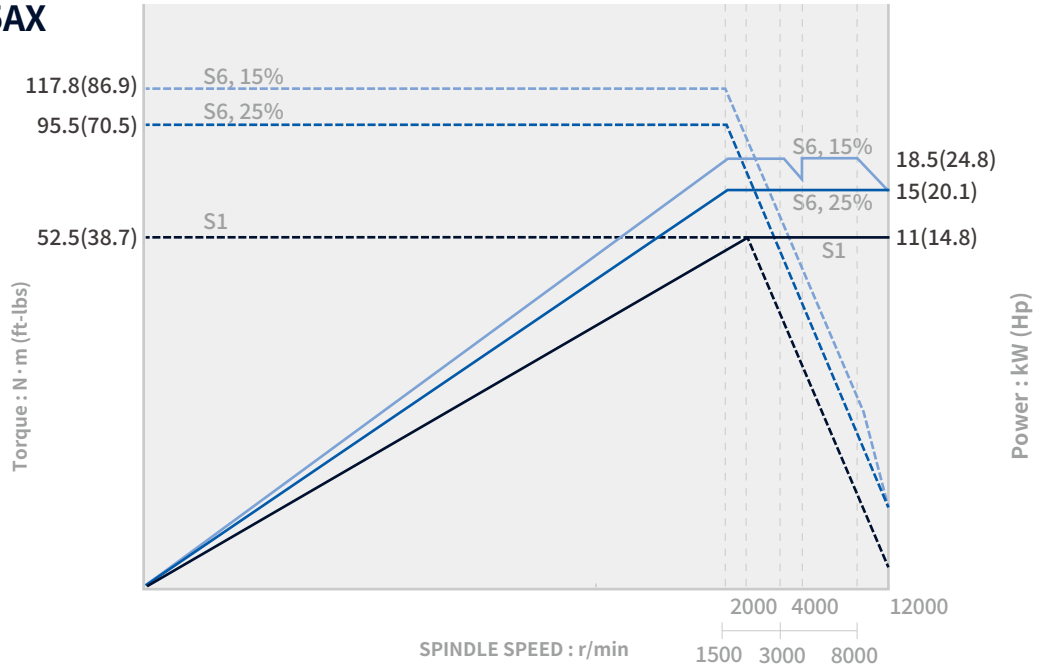

DNM 350/5AX

Max. spindle speed

20000 r/min OPTION

** Only DNM 350/5AX*

Max. spindle power

22 / 11 kW
(29.5/14.8 Hp)

Max. spindle torque

60 N·m
(44.3 ft-lbs)

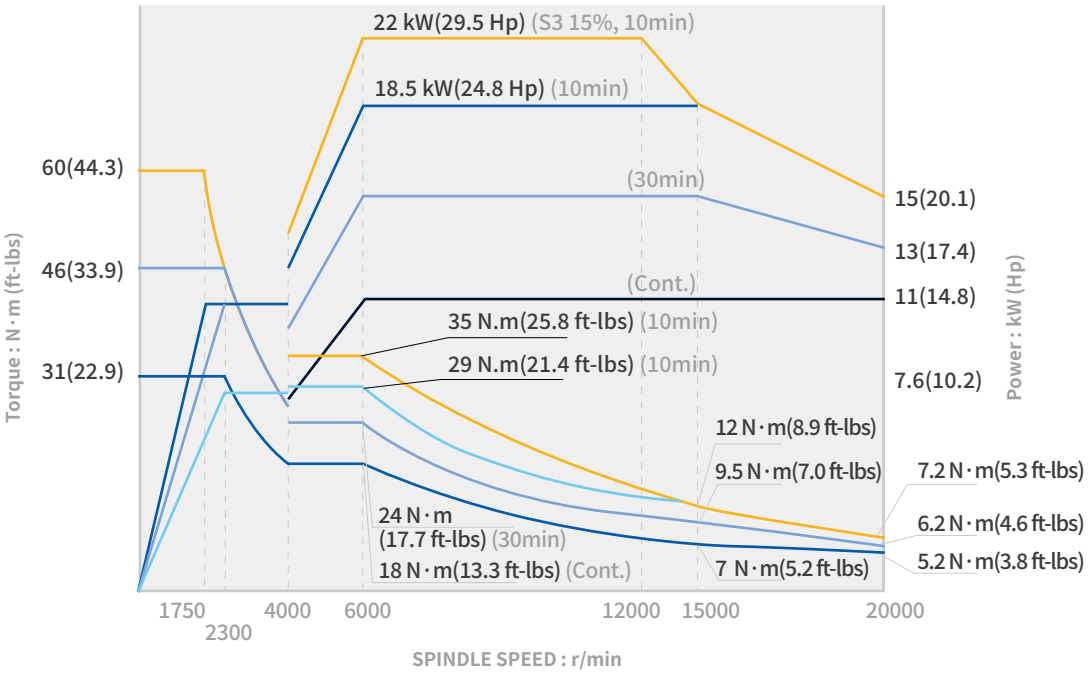

EXTERNAL DIMENSIONS

DNM 650/50 II

Units : mm (inch)

TOP

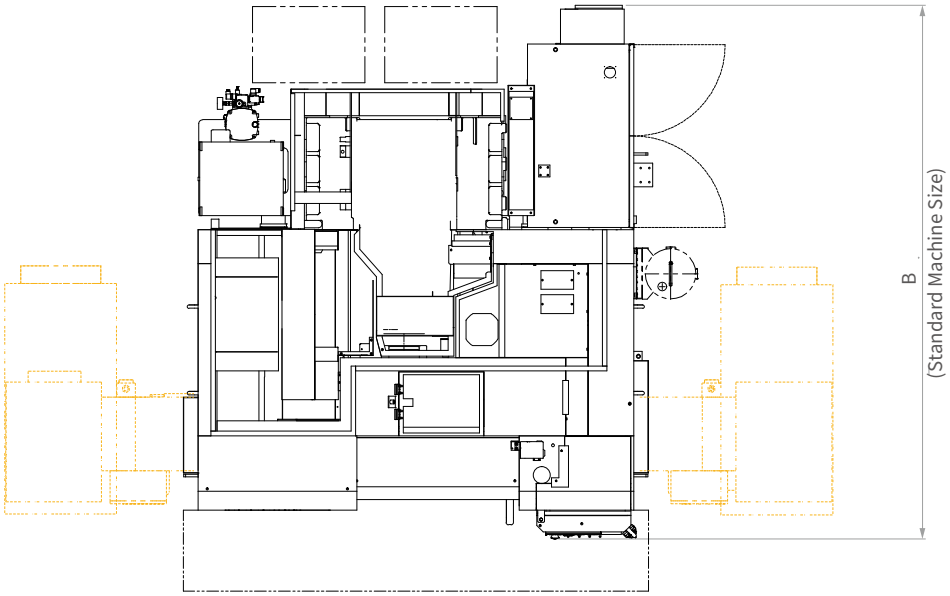

FRONT

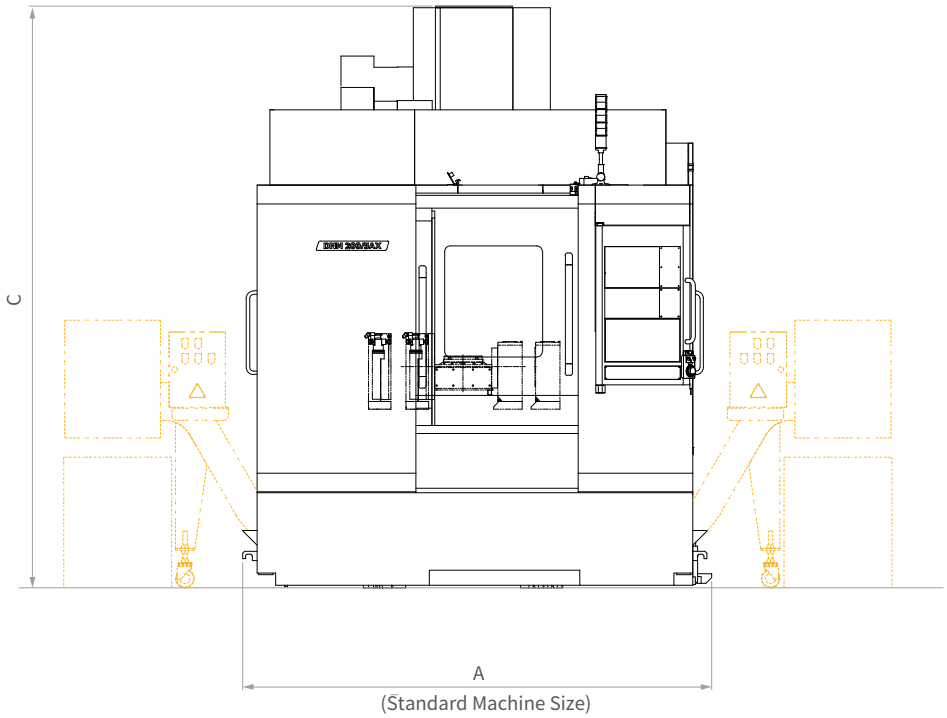

Model	A [with Chip Conveyor]	B	C
DNM 200/5AX	2490 [3447] (98.0 [135.7])	2835 (111.6)	3091 (121.7)
DNM 350/5AX	3150 [4085] (124.0 [160.8])	3209 (126.3)	3190 (125.6)

** Some peripheral equipment can be placed in other places.*

TABLE DIMENSIONS

Units : mm (inch)

DNM 200/5AX

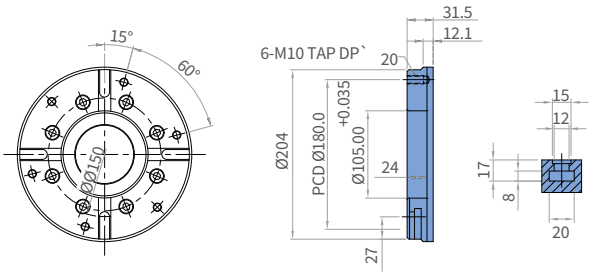

DNM 350/5AX

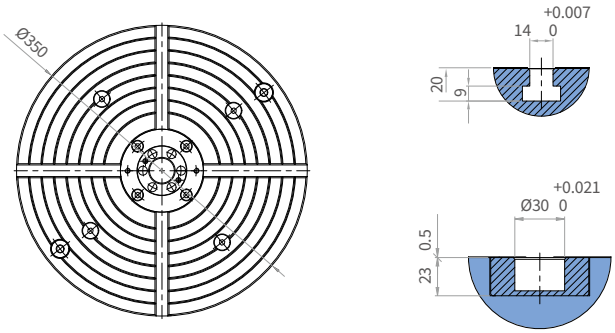

MACHINING AREA

Units : mm (inch)

DNM 200/5AX

A AXIS 0° FRONT VIEW

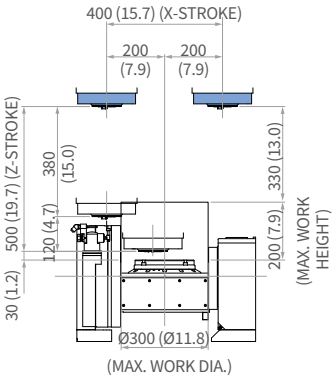

DNM 350/5AX

A AXIS 0° FRONT VIEW

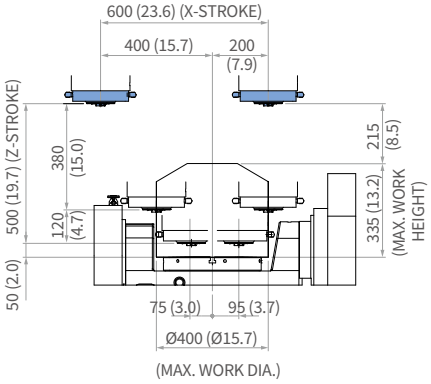

DNM 200/5AX

A AXIS 90° RIGHT VIEW

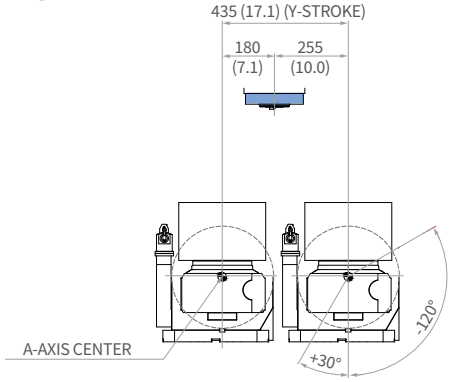

DNM 350/5AX

A AXIS 90° RIGHT VIEW

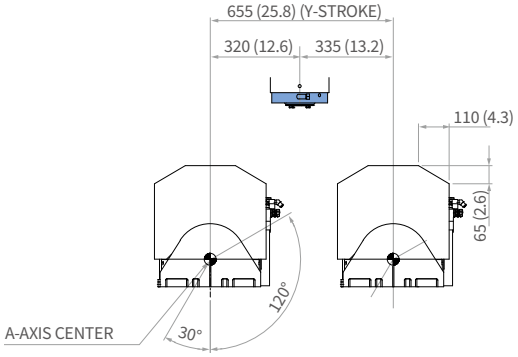

MACHINE SPECIFICATIONS

Description			Unit	DNM 200/5AX	DNM 350/5AX
Travel	Travel distance	X-axis	mm (inch)	400 (15.7)	
		Y-axis	mm (inch)	435(+180, -255) (17.1 (+7.1, -10.0))	655 (25.8)
		Z-axis	mm (inch)	500 (19.7)	
		A-axis	deg	150 (+30 ~ -120)	
		C-axis	deg	360	
	Distance from spindle nose to table top		mm (inch)	30 ~ 530 (1.2 ~ 20.9)	50 ~ 550 (2.0 ~ 21.7)
Feedrate	Rapid traverse rate	X-axis	m/min (ipm)	36 (1417.3)	
		Y-axis	m/min (ipm)	36 (1417.3)	
		Z-axis	m/min (ipm)	30 (1181.1)	
		A-axis	r/min	20	
		C-axis	r/min	30	
	Cutting feedrate	X/Y/Z-axis	m/min (ipm)	15000 (590.6)	
		A/C-axis	deg/min	7200	
Table	Table size		mm (inch)	Ø200 (7.9)	Ø350 (13.8)
	Table loading capacity		kg (lb)	40 (88.2) (Horizontal) / 60 (132.3) (Vertical)	250 (551.1)
	Table type		-	T-SLOT (12H8)	T-SLOT (14H8)
Spindle	Max. spindle speed		r/min	12000	12000 (20000)
	Spindle taper		-	ISO #40, 7/24 TAPER	
	Max. spindle torque		N·m (ft-lbs)	117 (86.3)	117 { 167 / 60 } (86.3 {123.2 / 44.3})
Automatic tool changer	Type of tool shank		-	MAS403 BT 40	
			-	{ CAT 40 }	
			-	{ DIN 69871-A40 }	
	Tool storage capacity		ea	30 { 40 }	30 { 40, 60 }
	Max. tool diameter (Continuous)		mm (inch)	30 Tools : 80 / 40 Tools : 76	
	Max. tool diameter (Near port empty)		mm (inch)	30 Tools : 125 / 40 Tools : 125	
	Max. tool length		mm (inch)	300 (11.8)	Ø80 : 270 / Ø125 : 210 (3.15 : 10.6 / 4.9 : 8.3)
	Max. tool weight		kg (lb)	8 (17.6)	
	Max. tool moment		N·m (ft-lbs)	5.88 (4.3)	
	Method of tool selection		-	Memory Random	
	Tool change time (tool-to-tool)		s	1.3	
	Tool change time (chip-to-chip)		s	3.7	
Motor	Spindle motor power		kW (Hp)	18.5 / 11 (24.8 / 14.8)	18.5 / 11 (22 / 18.5 or 22 / 11) (24.8 / 14.8 (29.5 / 24.8 or 29.5 / 14.8))
	Coolant pump motor power		kW (Hp)	0.25 (0.3)	0.4 (0.5)
Power source	Electric power supply		kVA	31.3	40.6 (45.7)
	Compressed air supply		Mpa (psi)	0.54 (78.3)	
Tank capacity	Coolant pump capacity		L (galon)	5.5 (1.5)	13 (3.4)
	Lubrication tank capacity		L (galon)	3.1 (0.8)	
Machine size	Height		mm (inch)	3091 (121.7)	3190 (125.6)
	Length		mm (inch)	2835 (111.6)	3209 (126.3)
	Width		mm (inch)	2490 (98.0)	3150 (124.0)
	Weight		kg (lb)	5500 (4059.0)	8500 (6273.0)
Control	NC System		-	DN Solutions Fanuc i Plus, Fanuc 31i Plus	DN Solutions Fanuc i Plus / Fanuc 31i Plus / HEIDENHAIN

{ } : option

WHY 5-Axis machining?

SINGLE SETUP EFFICIENCY

5-axis machining allows you to approach the workpiece from all angles, with complete access to five sides of the part in a single setup. This reduces the overall number of part setups compared to traditional machining, which minimizes machine downtime and maximizes chip making time.



IMPROVED PART ACCURACY

When making parts with multi-sided features using traditional 3-axis machining, multiple part setups are required. This means new inaccuracies can arise each time the workpiece is repositioned. 5-axis machining eliminates stacked tolerances and improves overall part dimensional accuracy.

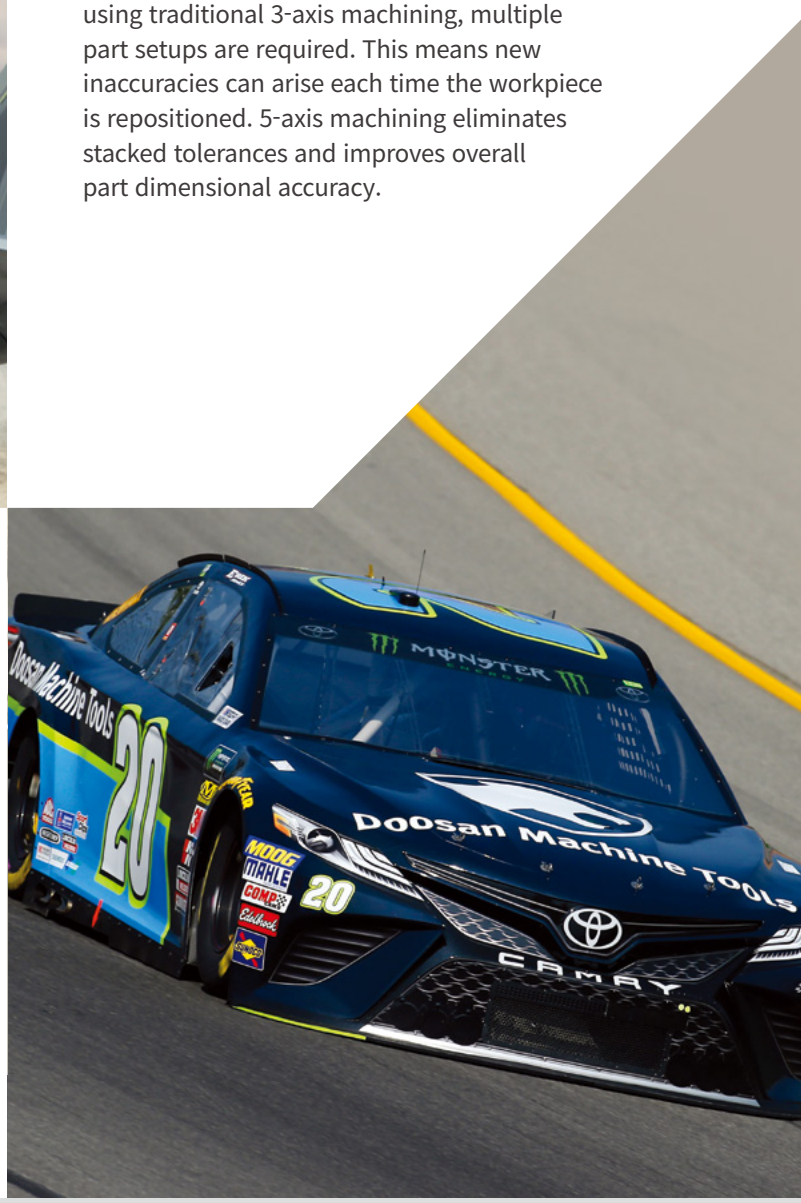

EXTENDED MACHINE SHOP CAPABILITY

DN Solutions 5-axis machines open up new doors for your machine shop. The increased efficiency will make you instantly more competitive, and full 5-axis machining capabilities give you the opportunity to quote on jobs that previously weren't possible. So, what are you going to make today?

"Compared with similar machines from Japan or Europe, DN Solutions has the same level of precision and quality at a better value for money."

– ***OMGM Group,*** *Italy*

"Our DN Solutions 5-axis is making complex, high precision parts for aerospace and defense. Cycle times have been reduced dramatically."

– ***Aerotech Precision Manufacturing,*** *Great Britain*

CUSTOMER SUPPORT AND SERVICES

WE'RE THERE FOR YOU WHENEVER YOU NEED US.

We help our customers operate at maximum efficiency by providing them with a range of tried, tested and trusted services - from pre-sales consultancy to post-sales support.



FIELD SERVICES

- On-site service
- Machine installation and testing
- Scheduled preventive maintenance
- Machine repair service



PARTS SUPPLY

- Supplying a wide range of original DN Solutions spare parts
- Parts repair service



TRAINING

- Programming, machine setup and operation
- Electrical and mechanical maintenance
- Applications engineering



TECHNICAL SUPPORT

- Supports machining methods and technology
- Responds to technical queries
- Provides technical consultancy

RESPONDING TO CUSTOMERS **ANYTIME, ANYWHERE**

DN SOLUTIONS GLOBAL NETWORK

DN Solutions provides systems-based professional support services, before and after the machine tool sale, by responding quickly and efficiently to customers. By supplying spare parts, product training, field service and technical support, we provide the expert care, attention and assistance our customers expect from a market leader.



66	COUNTRIES
140+	SALES NETWORKS
3	FACTORIES
6	REGIONAL HQS



DN SOLUTIONS

dn-solutions.com

Head Office

19F, 10, Tongil-ro, Jung-gu, Seoul,
Republic of Korea, 04527

Tel: +82-2-6972-0370
Fax: +82-2-6972-0400

DN Solutions America

360 E State PKWY,
Schaumburg, IL. 60173,
United states

Tel: +1-315-265-7500

DN Solutions Europe

Emdener Strasse 24, D-41540
Dormagen, Germany

Tel: +49-2133-5067-100
Fax: +49-2133-5067-111

DN Solutions (India) Private Limited.

Plot No. 137, Devanahalli General
Industrial Area (KIADB), ACIL,
Kundana and Kasaba Area,
Devanahalli, Bengaluru Rural – 562110.
Karnataka, INDIA.

Email: info.india@dncompany.com

DN Solutions China

Room 101,201,301,
Building 39 Xinzhuan Highway
No.258 Songjiang District
China Shanghai (201612)

Tel: +86 21-5445-1155
Fax: +86 21-6405-1472

DN Solutions Vietnam

M.O.R.E building 2F, 40A-40B Ut
Tich Street, 04 Ward 04,
District Tan Binh District,
Ho Chi Minh City, Vietnam

Tel: +84 28-7304-0163

DN Solutions Mexico

Avenida Parque Bicentenario
#100 Nave M65L3-6,
Fraccionamiento San Isidro
Business Park,
Santa Rosa Jauregui,
Querétaro, México

E-mail: efrain.figueroa@
dncompany.com

Sales inquiry

sales@dncompany.com

** For more details, please contact DN Solutions.*
** Specifications and information contained within this catalogue may be changed without prior notice.*

ver. EN 260615 SU