DN SOLUTIONS

6/8/10 INCH COMPACT TURNING CENTERS WITH Y-AXES

Lynx 2100LY·2600Y

Lynx 2100LY/LSY
Lynx 2600Y/SY





Lynx 2100LY·2600Y

The Lynx 2100LY is a new Y-axis model from the Lynx 2100 series and enables complex parts to be machined in a single setup. The Lynx 2600Y has a 380mm (max) machining diameter and has upgraded structural rigidity/accuracy to increase its machining capabilities and productivity. High precision off-center machining is easy to achieve and productivity gains, due to a significant reduction in cutting and non-cutting times when machining complex parts, can be realised.

CONTENTS

Product Overview

Basic Information

04 Basic Structure
05 Machining Area
06 Spindle
07 Turret
08 Tailstock

Detailed Information

09 Standard / Optional Specifications
10 Peripheral Equipment
11 FANUC i PLUS
13 SIEMENS S828D
14 Power | Torque
18 External Dimensions
20 Too Interface
23 Tooling System
28 Working Range
38 Machine Specifications

Customer Support Service

39 Customer Support and Services
39 Global Network



MACHINE COMPLEX SHAPES IN ONE SETUP

The Y-axis 105mm(±52.5mm) and sub-spindle enable complex parts, with a range of different features and details, to be machined faster and easier.

HIGH RELIABILITY

The machines' excellent reliability is due to the adoption of wider support structures, more stable beds, low vibration/low noise producing spindles, servo-driven turrets, and a full slideway covers that prevent coolant leaks and chips from penetrating the machine.

IMPROVED USER CONVENIENCE

The new EZ work and hot keys enable the user to operate peripheral devices quickly and conveniently. User convenience has been further enhanced with grease type lubrication and CNC tailstocks.



BASIC STRUCTURE

A stable, highly-rigid bed structure and the adoption of roller type LM guide on all axes improve durability and ensure high accuracy machining.

Feed axes configuration

High-productivity is achieved with a process-intensive structure comprising opposing spindles and upper and lower turrets.

Model	Chuck size	Travel distance (mm(inch))			Rapid traverse (m/min(ipm))		
		X axis	Y axis	Z axis	X axis	Y axis	Z axis
Lynx 2100LYA/ LSYA	6 inch	205 (8.1)	105 (4.1)	560 (22.0)	30 (1.2)	10 (0.4)	36 (0.4)
Lynx 2100LYB/ LSYB	8 inch						
Lynx 2600Y/SY	10 inch	250 (9.8)	105 (4.1)	680 (26.8)	30 (1.2)	10 (0.4)	30 (1.2)

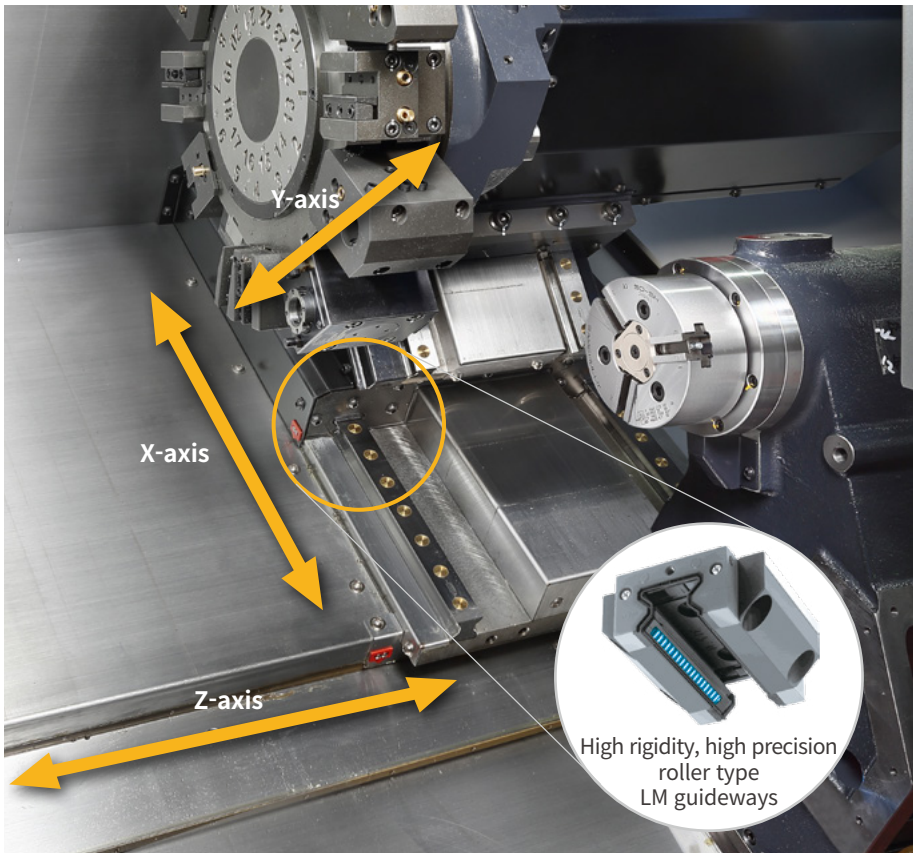

Multi-tasking functions

The combined functions of a spindle, a sub-spindle, a Y-axis and milling capabilities are greater than the combined machining capabilities and productivity generated by two, or more, 'general' machines.

Reduced production lead time

25 %



Workpiece : Machinery
Material : Aluminum (AL7075)
Workpiece size : Ø70 x 35 mm (Ø2.8 x 1.4 inch)
Cutting tool : 16 set

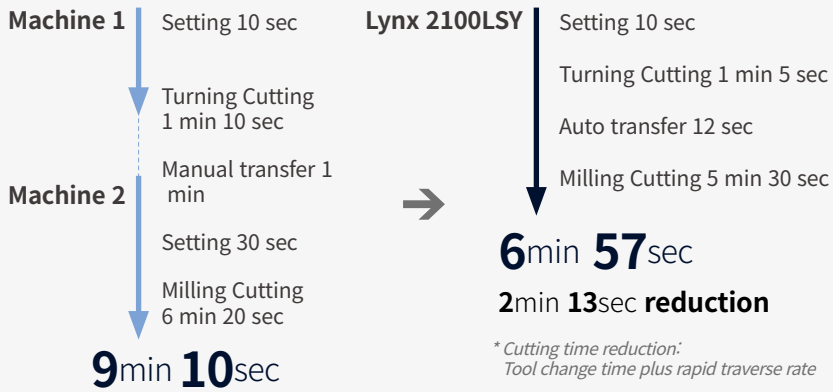

Lynx 2100 Series with Sub-spindle and Y-axis, enables 'One Hit' machining

Save time...reduce labor···achieve higher accuracies!

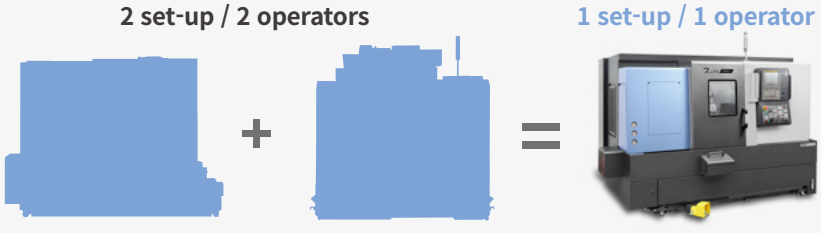

MACHINING AREA

The Lynx 2100LY and Lynx 2600Y series comprises 4 models with different chuck sizes and either sub-spindles or tailstocks.

Model	Max. Turning diameter (a)	Max. Turning length (b)	Sub spindle
Lynx 2100LYA / LYB	300 mm* (11.8 inch)	510 mm (20.1 inch)	X
Lynx 2100LSYA / LSYB			O
Lynx 2600Y	380 mm** (15.0 inch)	610 mm (24.0 inch)	X
Lynx 2600SY			O

** Max. Turning diameter is 236mm (9.3 inch) if optional 16 station turret is specified*

*** Max. Turning diameter is 292mm (11.5 inch) if optional 16 station turret is specified*

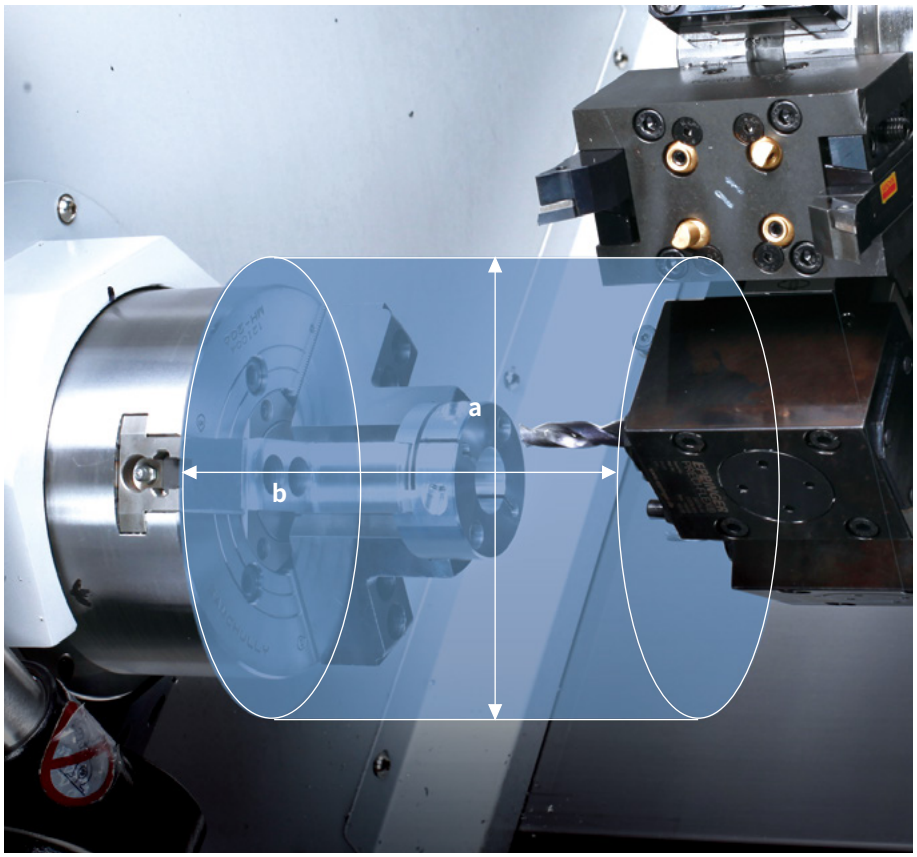

High performance Y-axis for complex machining

The Y-axis enables the flexible use and application of the machine's rotary milling tools and the ability to machine complex parts (and features) to high accuracy.

Y axis travel

105 (±52.5) mm
(4.1 (±2.1) inch)

Y axis rapid traverse

10 m/min
(393.7 ipm)

Groove finish cutting using the Y-axis

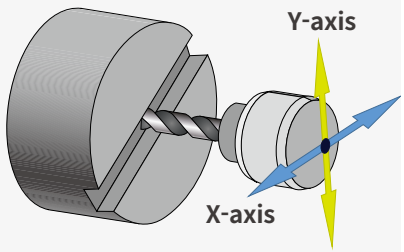

Multi-face cutting

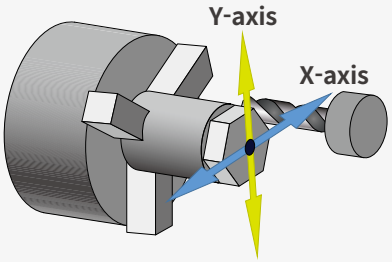

Milling in an eccentric position

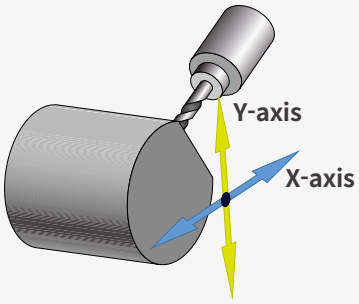

Y & X-axis circular interpolation

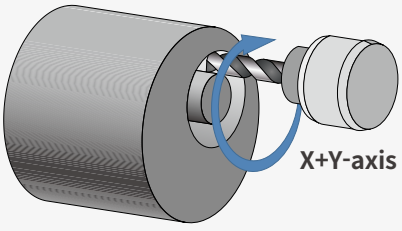

SPINDLE

The high power, high-torque spindle motor enables high-precision and heavy-duty cutting, and significant improvements in productivity.

Main spindle

Powerful spindle motor is capable of 0.001degree high-accuracy C-axis control and can provide a large bar capacity up to 81mm(3.2inch)

Max. spindle speed

Lynx 2100LYA/LSYA

6000 r/min

Max. spindle motor power

Lynx 2600Y/SY

18.5 kW

(24.8 Hp)

Bar working dia.

Lynx 2600Y/SY

81 mm

(3.2 inch)

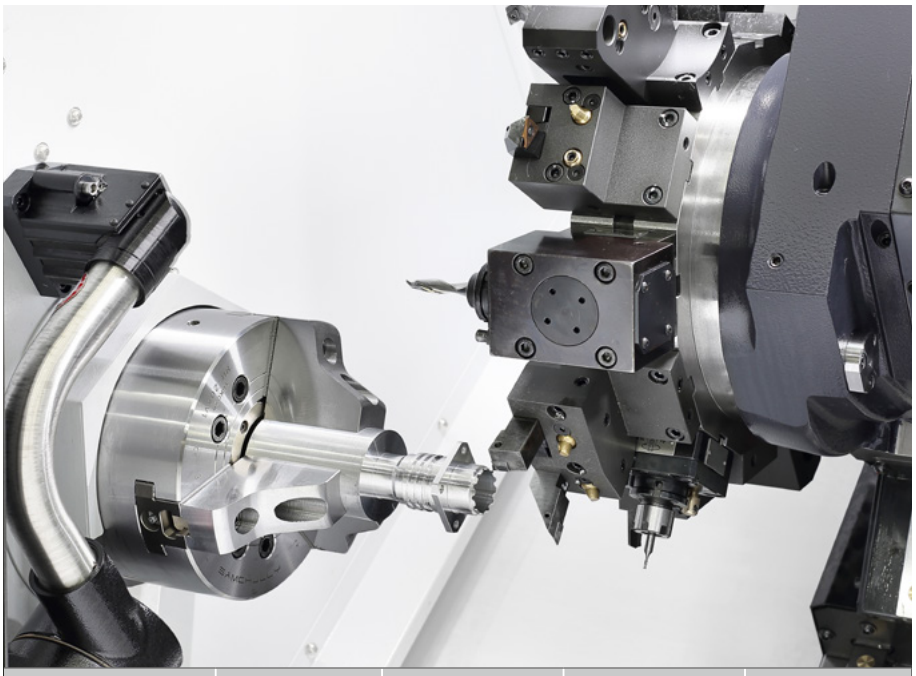

Model	Max. speed r/min	Max. Power kW (Hp)	Max.Torque N·m (ft-lbs)	Bar Working Dia.mm (inch)
Lynx 2100LYA/LSYA	6000	15 (20.1)	127 (93.7)	51 (2.0)
Lynx 2100LYB/LSYB	4500	15 (20.1)	169 (124.7)	67 (2.6)
Lynx 2600Y/SY	3500	18.5 (24.8)	403 (297.4)	81 (3.2)

Sub-spindle

The sub-spindle function enables rear-side cutting in a single setup to be achieved, thereby improving productivity and efficiency.

Max. spindle speed

Lynx 2100LSYA/LSYB

6000 r/min

Max. spindle motor power

Lynx 2600SY

7.5/5.5/5.5 kW

(10.1/7.4/7.4 Hp)

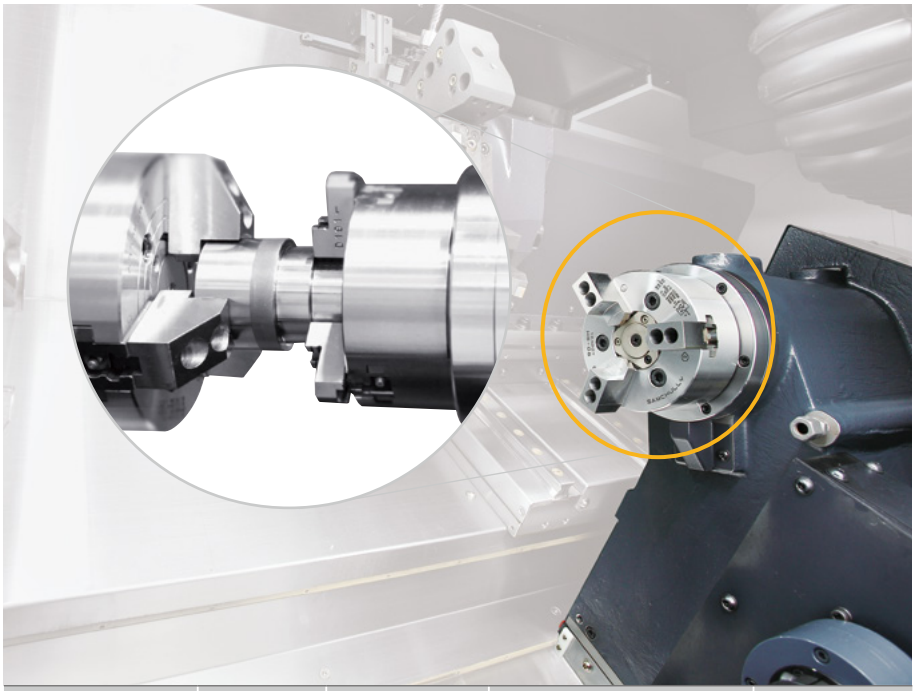

Models	Standard chuck size	Spindle speed r/min	Max.power kW (Hp)	Max torque N·m (ft-lbs)
Lynx 2100LSYA/ LSYB	5 inch	6000	5.5/5.5/3.7 (7.4/7.4/5.0) (S3 25%/S3 60%/S1 Cont.)	46 (33.9)
Lynx 2600SY	6 inch	4500	7.5/5.5/5.5 (10.1/7.4/7.4) (S6 25%/S6 40%/S1 Cont.)	84 (62.0)

TURRET

Servo driven turret indexing increases process reliability and the BMT type milling turret delivers improved rigidity.

Servo-driven turret

The high-torque servo motor controls a) rotational acceleration and deceleration of the turret b) clamping/ unclamping operations. Its excellent dividing position ensures consistent high machining accuracies.

Lynx 2100LY

Number of tool stations

12 {24 position, 16ea OPTION}

Indexing time

0.11 s

Max. rotary tool speed

BMT45P
6000 r/min
{10000 r/min OPTION}

Lynx 2600Y

Number of tool stations

12
{12/ 24 position OPTION , 16ea OPTION}

Indexing time

0.15 s

Max. rotary tool speed

BMT55P
6000 r/min



12 station

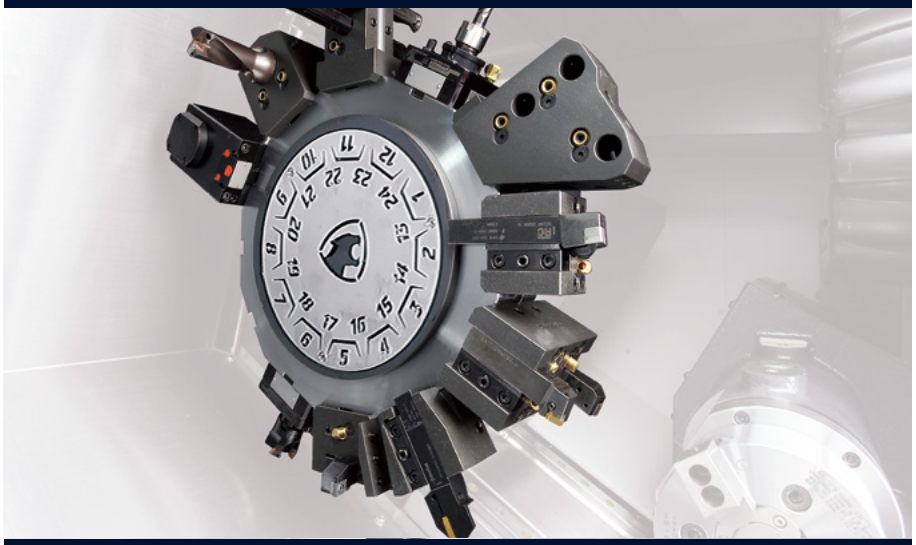

16 station



TAILSTOCK

Adoption of the hydraulically actuated CNC tailstock (hydraulic type) enables tailstock positioning and work setting to be achieved using the operation panel.
The dedicated screen reduces work setting times by about 50%.

CNC Tailstock (Hydraulic Type)

Lynx 2100LYA/LYB/2600Y (standard)

Setting time reduced by

50 % ↓

Models	Tailstock travel mm (inch)	Tailstock center Type	Tailstock Center	Std./ Opt.
Lynx 2100LYA/ LYB	580 (22.8)	Live Center	MT #4	Std.
Lynx 2600Y	700 (27.5)	Live Center	MT #4	Std.

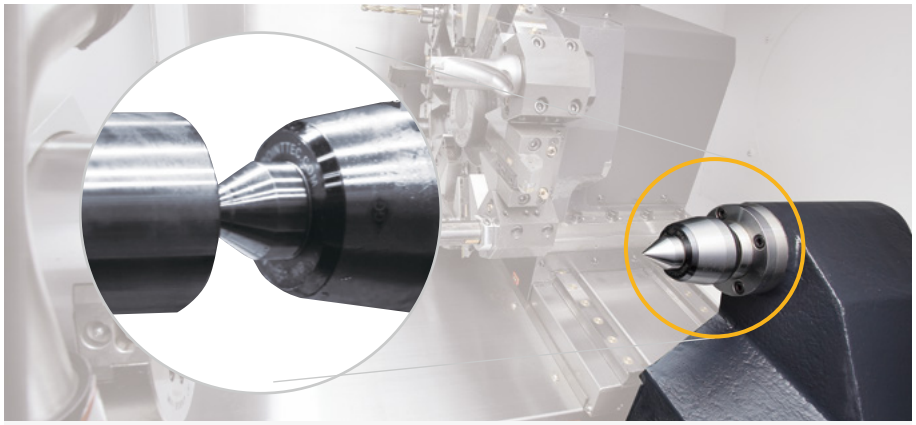



The EZ work System enables fast and easy tailstock positioning and control.

Work clamp → Tailstock moving → Auto memory of support point by a quick and simple operation (button) → Auto support or retreat using the M-code or buttons on the operation panel

DN SOLUTIONS GANTRY LOADER

The DN Solutions Gantry Loader is compact and easily customizable stand-alone type of automation solution controlled by a motion controller.

Discription		Unit	Lynx 2100LY/LSY
Travel*	**Z / Y-axis**	mm (inch)	4422 / 1046 (174.1 / 41.2)
Rapid traverse	**Z / Y-axis**	m/min (ipm)	210 / 180 (8267.7 / 7086.6)
Work Capacity		mm (inch)	Ø150 x 90 (5.9 x 3.5)
		kg (lb)	3 (6.6)
Number of Pallets (Work Stocker)		st	14

** The travel distance is in case of A3 type.*
For further information, please contact DN Solutions.



STANDARD | OPTIONAL SPECIFICATIONS

A range of options is available to suit individual requirements.

Description	Features	Lynx 2100LYA	Lynx 2100LYB	Lynx 2100LSYA	Lynx 2100LSYB	Lynx 2600Y	Lynx 2600SY
Main chuck	6 inch	●	X	●	X	X	X
	8 inch	○	●	○	●	X	X
	10 inch	X	○	X	○	●	●
	12 inch	X	X	X	X	○	○
	Non-chuck	○	○	○	○	○	○
Sub Chuck	5 inch	X	X	●	●	X	X
	6 inch	X	X	X	X	X	●
	8 inch	X	X	X	X	X	○
Jaw	Soft jaw	●	●	●	●	●	●
	Hard jaw	○	○	○	○	○	○
Chucking Option	Dual pressure chucking	○	○	○	○	○	○
	Chucking clamp confirmation	●	●	●	●	●	●
Turret	BMT45P_12st.(24 Position)	●	●	●	●	X	X
	BMT45P_16st.	○	○	○	○	X	X
	BMT55P_12st.	X	X	X	X	●	●
	BMT55P_12st.(24 Position)	X	X	X	X	○	○
	BMT55P_16st.	X	X	X	X	○	○
Tailstock	CNC Tailstock (Hydraulic)	●	●	X	X	●	X
	Live center(MT#4)	●	●	X	X	●	X
Coolant Pump	1.5 bar	●	●	●	●	●	●
	Increase power (4.5/7/10/14.5/20 bar)	○	○	○	○	○	○
	Add. coolant pump(for option) 4.5 bar	○	○	○	○	○	○
Coolant options	TSC for sub spindle	X	X	○	○	X	○
	Oil skimmer	○	○	○	○	○	○
	Water soluble Coolant Chiller**	○	○	○	○	○	○
	Coolant pressure switch	○	○	○	○	○	○
	Coolant level switch	●	●	●	●	○	○
	Chuck coolant	○	○	○	○	○	○
	Coolant gun	○	○	○	○	○	○
Chip disposal options	Side type chip conveyor	○	○	○	○	○	○
	Rear type chip conveyor	○	○	○	○	○	○
	Chip bucket	○	○	○	○	○	○
	Chip air blower	○	○	○	○	○	○
	Mist collector interface	●	●	●	●	●	●
	Mist collector (Stand alone type)	○	○	○	○	○	○
Standard devices	Front door interlock	●	●	●	●	●	●
	Manual book	●	●	●	●	●	●
	Installation parts	●	●	●	●	●	●
	Safety sticker	●	●	●	●	●	●
	Work light	●	●	●	●	●	●
	Foot switch	●	●	●	●	●	●
	Tool load monitoring system	●	●	●	●	●	●
Others	Linear scale	○	○	○	○	○	○
	Signal tower	○	○	○	○	○	○
	Air gun	○	○	○	○	○	○
	Automatic Power off	○	○	○	○	○	○
	Thermal compensation(sensor type)	○	○	○	○	○	○
	Sketch turn S/W	○	○	○	○	○	○
	Top protection cover	○	○	○	○	○	○
	Tool kit(l-lench/spanner)	○	○	○	○	○	○
Measuring & Automation	Tool setter (Manual)	○	○	○	○	○	○
	Tool setter (Automatic)	○	○	○	○	○	○
	Part catcher with parts box	○	○	○	○	○	○
	Part catcher with parts conyeyor	○	○	○	○	○	○
	Workpiece ejector	X	X	○	○	X	○
	Auto door	○	○	○	○	○	○
	Bar feeder interface	○	○	○	○	○	○
	Robot interface	○	○	○	○	○	○
	Axis-tool number display	○	○	○	○	○	○
Customized special options*	Chip Breaking System (CBS II)	○	○	○	○	X	X
	Tsc for main spindle_preparation	○	○	○	○	○	○
	Chuck pressure switch	○	○	○	○	○	○
	Automatic top door	○	○	○	○	○	○
	Coolant shower	○	○	○	○	○	○
	Workpiece measuring system	○	○	○	○	○	○
	Quick change tooling (CAPTO)	○	○	○	○	○	○

※ Please contact your DN Solutions representative for detailed machine information.

● *Standard* ○ *Optional* X *N/A*

** When using a semi-synthetic type or synthetic type, contact our sales representative or service center in advance.*

*** Technical consultation is mandatory for the chilling of non-water soluble coolant.*

⚠ Fire Safety Precautions | There is a high risk of fire when using non-water-soluble cutting fluids, processing flammable materials, neglecting the controlled and careful use of coolants and modifying the machine without the consent of the manufacturer. Always check the SAFETY GUIDELINES carefully before using the machine.

PERIPHERAL EQUIPMENT

Chip conveyor OPTION


Long


Short


Needle

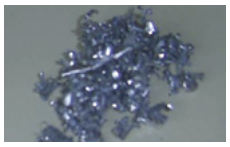
Sludge

Hinged belt type : Most common type of chip conveyor. Appropriate for steel materials generating chips over 30mm.

Magnetic scraper type : Chip conveyor with a magnet. Appropriate for machining cast iron and the generation of fine chips.

Drum filter type : Drum filter type chip conveyor. Appropriate for aluminum work for filtering small chips.

Chip conveyor type \ Material		Carbon steel			Cast iron		Aluminium		
		Long	Short	Needle	Short	Sludge	Long	Short	Needle
Hinged belt type		○	△	X	△	X	○	△	X
Scrapper type	Normal	X	○	△	○	△	X	△	X
	Magnetic	X	○	○	○	○	-	-	-
Drum filter type	Hinged type	○	△	X	△	X	○	△	X
	Scrapper	X	○	△	○	△	X	○	△

●: Suitable, △: Possible, X: Not suitable

Quick change CAPTO OPTION

The Quick Change Tool system simplifies tool change operation. Recommended for users who need to change tools frequently or reduce the set-up time.



Greaselubrication system

The standard grease lubrication system eliminates the need for an oil skimmer and reduces lubrication costs by about 80% compared to oil lubrication.

Yearly maintenance cost

MAX. **80** % ↓



Coolant chiller (recommended) OPTION

A coolant chiller is recommended to help prevent temperature rises and to reduce thermal deformation when using a water-insoluble coolant or highpressure coolant system (i.e., power over 1.5kW).

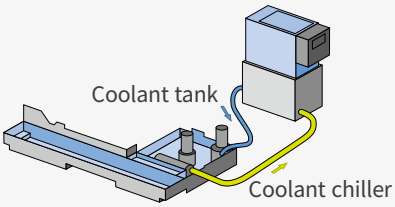

Axis-tool number display OPTION

Axis-tool 'Number Display' is located inside the machine and it displays real time information to the operator.



Tool setter (Manual /Auto) (Tool length measurement device) OPTION

The tool setter facilitates the setting of cutting tools, and can be used to automatically detect and compensate for worn tools.



Part catcher OPTION

The Part Catcher automatically catches finished parts and transfers them securely to downstream processes.

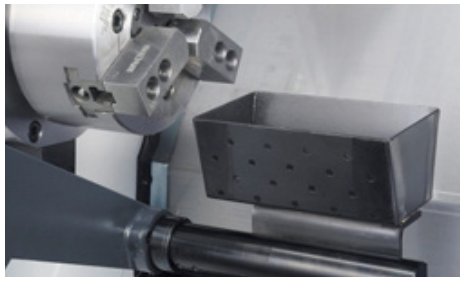



Oil skimmer OPTION

As the Lynx 2100 Series uses a grease type lubricant, the coolant rarely mixes with oil.
This optional oil skimmer helps to maintain the exceptional service life of the coolant.

Mist collector OPTION



Coolant Blower OPTION



Singnal tower OPTION



FANUC i PLUS

DN Solutions Fanuc i Plus maximizes customer productivity and convenience.



15" Screen + New OP

DN Solutions Fanuc i Plus' operation panel enhances operating convenience by incorporating common-design buttons and layout. It features a Qwerty keyboard for fast and easy data input and operation.

DN Solutions Fanuc i Plus

- 15-inch color display
- Intuitive and user-friendly design

USB and PCMCIA card QWERTY keyboard

- EZ-Guide i standard
- Ergonimic operator panel
- 2MB Memory
- Hot keys

iHMI touchscreen OPTION

iHMI provides an intuitive interface that uses a touchscreen for quick and easy operation.

Range of applications

Providing various applications related to planning, machining, improvement and utility, for customer convenience.



SKETCH-TURN OPTION

DN Solutions Conversational programming software for PC

- Easy to learn for beginners
- Time savings in programming
- Reduce processing cycle time



NUMERIC CONTROL SPECIFICATIONS

FANUC

Description	Item	Specifications	Y DN Solutions Fanuc i PLUS	SY DN Solutions Fanuc i PLUS
Controlled axis	Controlled axes		4(X,Z,C,Y)	6(X,Z,C1,Y,C2,B)
	Simultaneously controlled axes		4 axes	4 axes
Data input/output	Fast data server		○	○
	Memory card input/output		●	●
	USB memory input/output		●	●
	Larger capacity memory_2GB	Note *2) Available Option only with 15" Touch LCD (iHMI Only)	○ *2)	○ *2)
Interface function	Embedded Ethernet		●	●
	Fast Ethernet		○	○
	Enhanced Embedded Ethernet function		●	●
Operation	DNC operation	Included in RS232C interface.	●	●
	DNC operation with memory card		●	●
Program input	Workpiece coordinate system	G52 - G59	●	●
Feed function	AI contour control I	G5.1 Q_, 40 Blocks	●	●
	AI contour control II	G5.1 Q_, 200 Blocks	○	○
Operation Guidance Function	EZ Guidei (Conversational Programming Solution)		●	●
	iHMI with Machining Cycle	Note *1) Only with 15" Touch LCD standard	○ *1)	○ *1)
	EZ Operation package		●	●
Setting and display	CNC screen dual display function		●	●
Network	FANUC MTConnect		✪	✪
	FANUC OPC UA		✪	✪
Others	Display unit	15" color LCD	●	●
		15" color LCD with Touch Panel	○	○
	Part program storage size & Number of registerable programs	640M(256KB)_500 programs	X	X
		5120M(2MB)_1000 programs	●	●

Network: FANUC MTConnect and FANUC OPC UA available.

● *Standard* ○ *Optional* *X N/A* ✪ *Available*

DN SOLUTIONS FANUC i PLUS

EZ-Guide i

Using the DN Solutions EZ-Guide i, users can create a cutting program for any desired shape, including patterns, by entering just the dimensions.

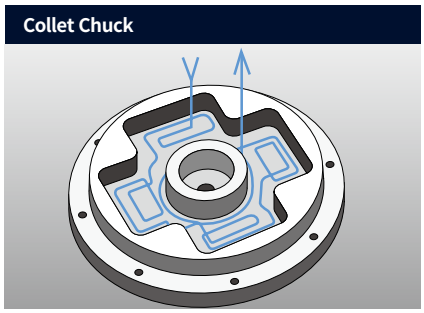



Main screen

EXAMPLE PROGRAMMING : CUTTING SHAPE

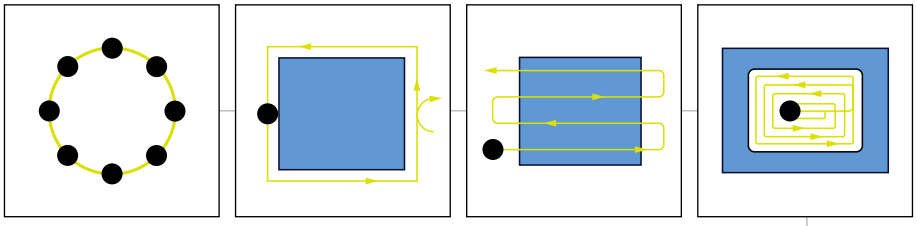

AUTOMATIC CREATION OF CUTTING PROGRAM

```
O7000 (SAMPLE PROGRAM) ;
...
M3 S1500 ;
G0 X50. Y125. ;
G0 Z30. ;
G1040 T0.5 J3. H0.2 K0.5 ... ;
G1020 H120. V50. U37. W68. ... ;
G0 Z80. ;
M5 ;
```

A cutting program is automatically created with the entered values.

EZ-GUIDE I SCREEN

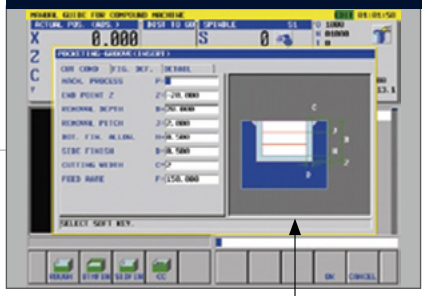

Enter the dimensions of the shape

EZ Work

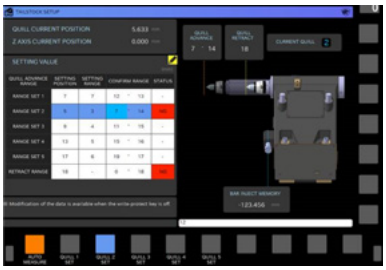

Tailstock quill position detection function

The user can set the tailstock position minutely with sensor. This fuction is able to recall the positions that the user had set. It can reduce the setting time.

Programing

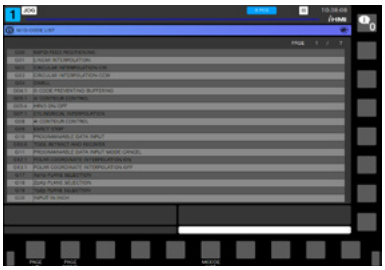

G code / M code

The user can check the explanation of G code and M code in EZ Work.

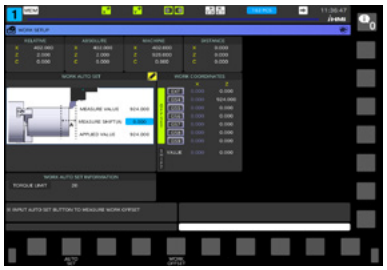

Workpiece setting OPTION

By measuring the position of the workpiece, the user sets the offset manually or automatically.

Operation / Maintenance



Tool load monitoring

During cutting, abnormal load caused by wear or damage of the tool is detected and an alarm is triggered to prevent further damage.



Thermal compensation OPTION

Sensors check and calculate the displacements and compensate it beforehand.



Work management

Capability of checking operation hours of the system, and quantity of finished workpieces.

CONVENIENT OPERATION

Siemens S828D



15.inch display + New OP

Siemens 828D' operation panel enhances operating convenience by incorporating common-design buttons and layout. It features a Qwerty keyboard for fast and easy data input and operation.

- 15.6 inch display
- USB (standard)
- QWERTY keyboard

Conversational convenient function

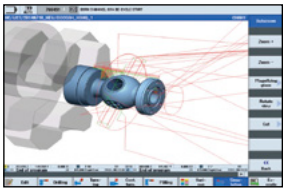

Cutting and operation support function
This function shows a cutting and tool path simulation in real-time.

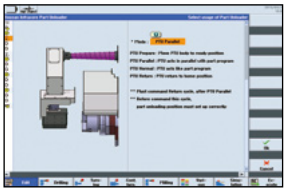

Shop-turn mode
[various]
⬇
[attachments]

The automation elements (parts catcher, parts unloader etc.), can be easily controlled via interactive screens.

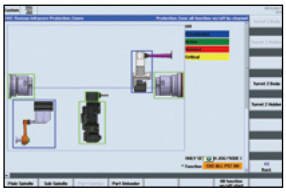

[Custom]
⬇
[Protection zones]

Operation safety function
Protection Zone Synchronized Actions checks the interference between the turret and the spindle to prevent collisions caused by operator error.

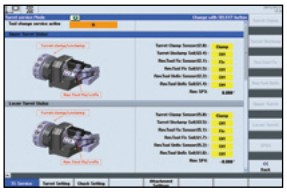

[offset]
⬇
[operating parameter]
⬇
[TC service]

Maintenance and service convenience function
Maintenance and service of major equipment and peripheral devices, including the timer and parts counter settings can be easily undertaken.

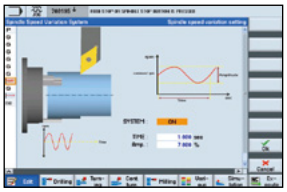

[various]
⬇
[attachment]
⬇
[DSSV]

Machining accuracy improvement
The NC controls spindle speed at an optimal level for precision threading and turning, making it possible to automatically improve surface roughness.

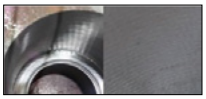

Before applying the functi

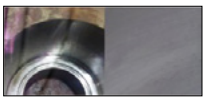

After applying the function

NUMERIC CONTROL SPECIFICATIONS

SIEMENS

Description	Item	Specifications	2-Axis S828D	M S828D	S S828D	MS S828D	Y S828D	SY S828D
Controlled axis	Controlled axes		X,Z,SP	X,Z,C,R	X,Z,C,C2,B	X,Z,C,R,C2,B	X,Z,C,R,Y	X,Z,C,R,C2,Y,B
	Simultaneously controlled axes		4 axes	4 axes	4 axes	4 axes	4 axes	4 axes
Data input/output	Memory card input/output		X	X	X	X	X	X
	USB memory input/output		●	●	●	●	●	●
Interface function	Ethernet	(X130)	○	○	○	○	○	○
Operation	On network drive	(without EES option, Extcall)	●	●	●	●	●	●
	On USB storage medium, e.g. memory stick	(without EES option, Extcall)	●	●	●	●	●	●
Program input	Workpiece coordinate system	G54 - G59, G507 - G599	●	●	●	●	●	●
Feed function	Advanced surface		X	X	X	X	X	X
	Top surface		X	X	X	X	X	X
	Look ahead number of block		1	1	1	1	1	1
Programming & Editing function	3D simulation, finished part		●	●	●	●	●	●
	Simultaneous recording		●	●	●	●	●	●
	DXF Reader for PC integrated in SINUMERIK Operate		○	○	○	○	○	○
Operation Guidance Function	Shopturn		●	●	●	●	●	●
	EZ Operation package		●	●	●	●	●	●
Setting and display	Operation via a VNC viewer		●	●	●	●	●	●
Network	MTConnect		✪	✪	✪	✪	✪	✪
	OPCUA		○	○	○	○	○	○
Others	Display unit	15.6" color display with touch screen	●	●	●	●	●	●
	Part program storage size	CNC user memory 5MB	●	●	●	●	●	●
		CNC user memory 100 MB	○	○	○	○	○	○
		CNC user memory 6GB	X	X	X	X	X	X
		CNC user memory 40GB (with PCU or IPC)	X	X	X	X	X	X
		CNC user memory without limit(Execution from extenal storage devices)(EES / Using by USB or Network)	○	○	○	○	○	○
		HMI user memory for CNC part program 6GB	X	X	X	X	X	X

● *Standard* ○ *Optional* *X N/A* ✪ *Available*

POWER | TORQUE

FANUC

Main Spindle

Lynx 2100LYA / LSYA

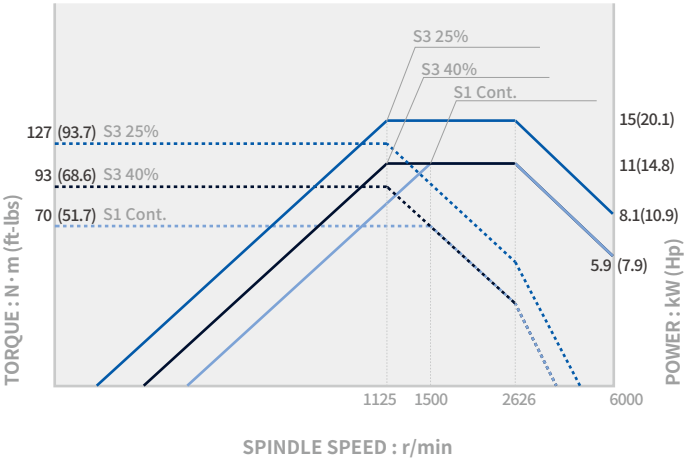

Sub-Spindle

Lynx 2100LSYA / LSYB

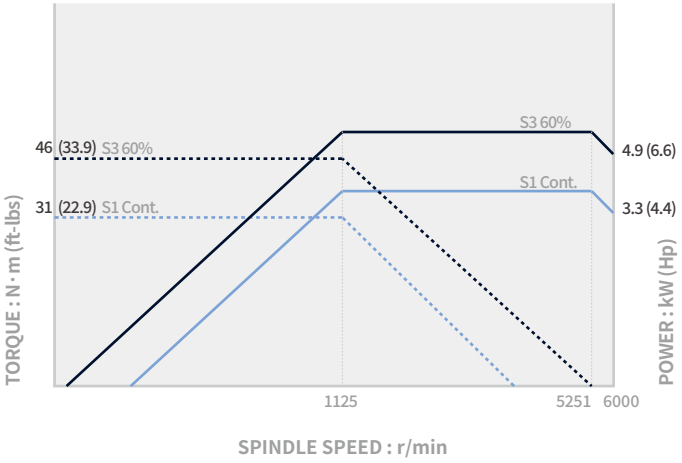

Main Spindle

Lynx 2100LYB / LSYB

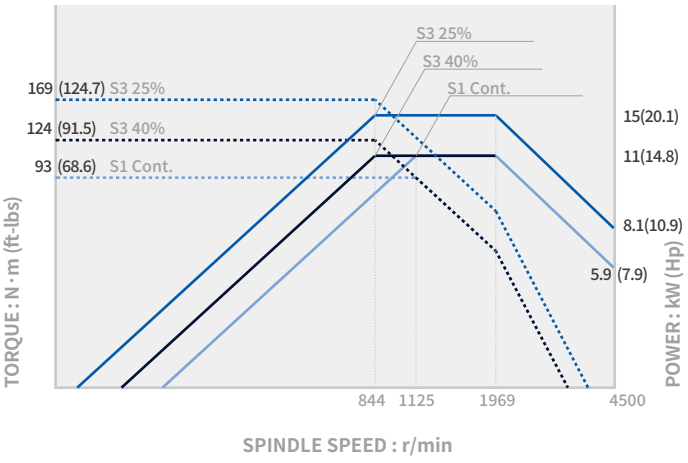

Rotary Tool

Lynx 2100LY / LSY

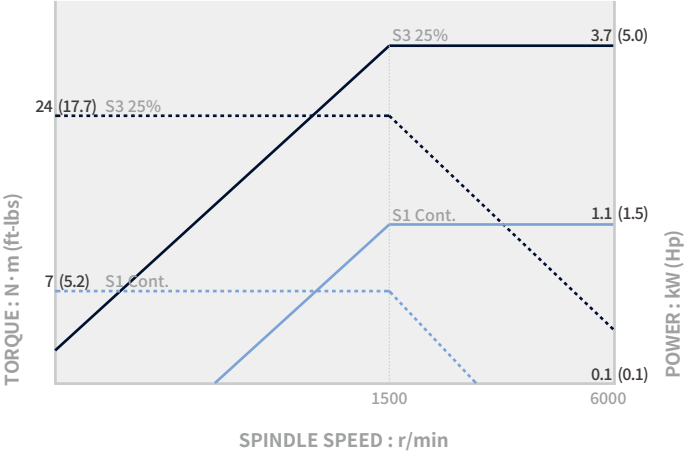

Rotary Tool

Lynx 2100LY / LSY OPTION

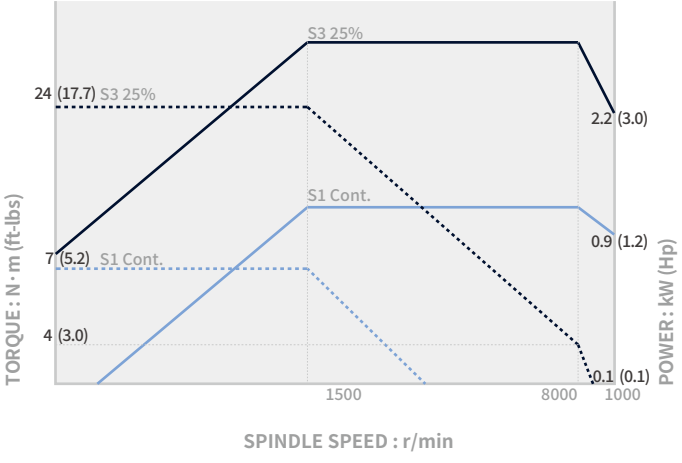

POWER | TORQUE

SIEMENS

Main Spindle

Lynx 2100LYA / LSYA

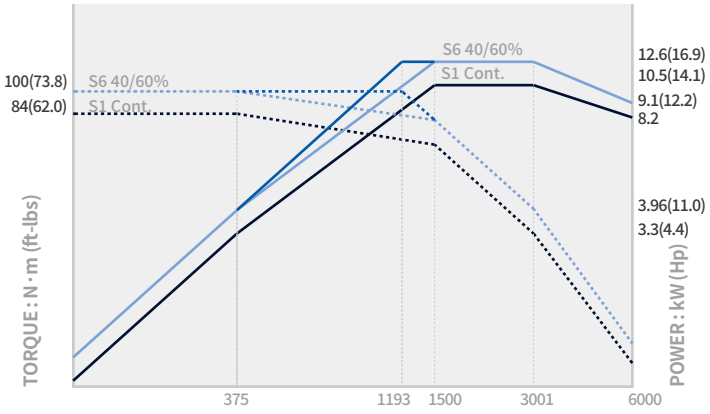

Main Spindle

Lynx 2100LYB / LSYB

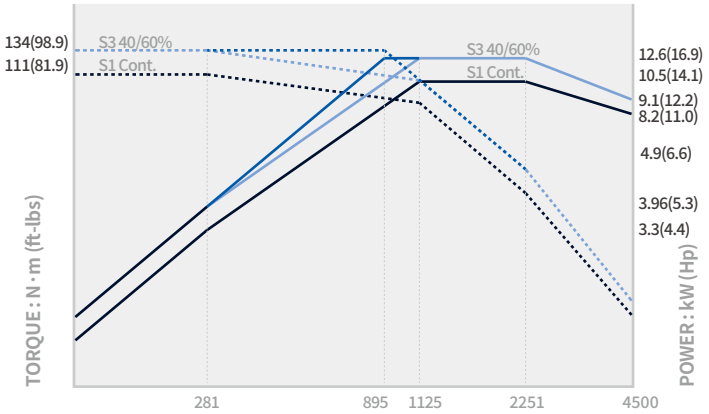

Sub-Spindle

Lynx 2100LSYA / LSYB

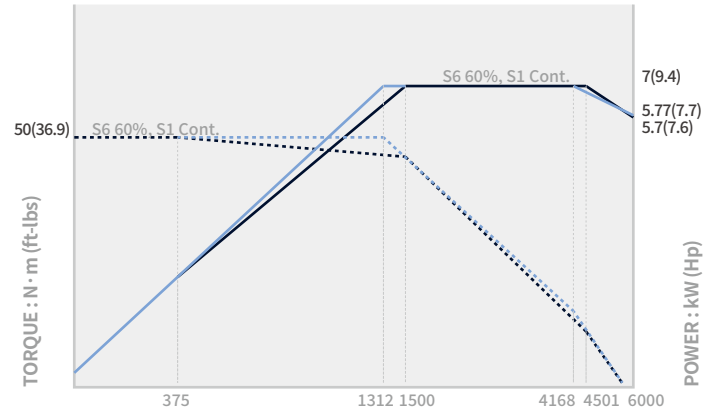

Rotary Tool

Lynx 2100LYA / LYB / LSYA / LSYB OPTION

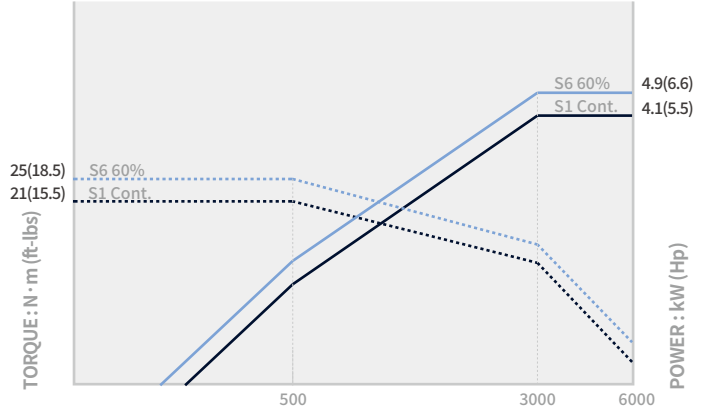

POWER | TORQUE

FANUC

Main Spindle Lynx 2600Y/SY

Max. spindle speed
3500 r/min

Max. spindle power
18.5 kW (24.8 Hp)

Max. spindle torque
403 N·m (297.4 ft-lbs)

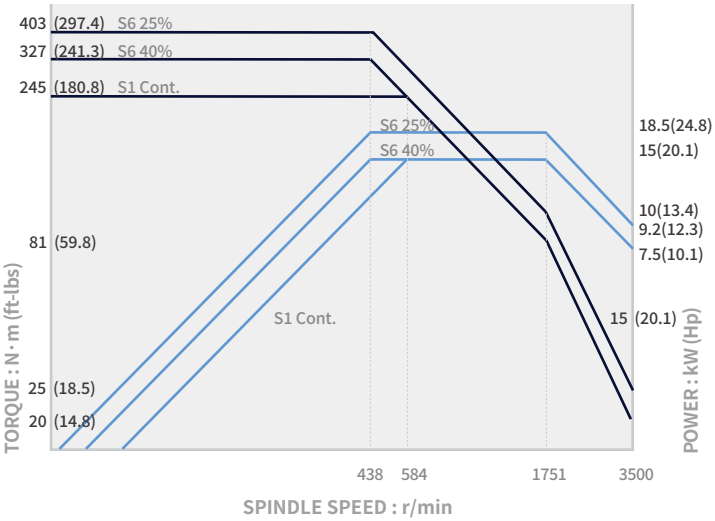

Sub-Spindle Lynx 2600Y/SY

Max. spindle speed
4500 r/min

Max. spindle power
7.5 kW (10.1 Hp)

Max. spindle torque
84 N·m (62.0 ft-lbs)

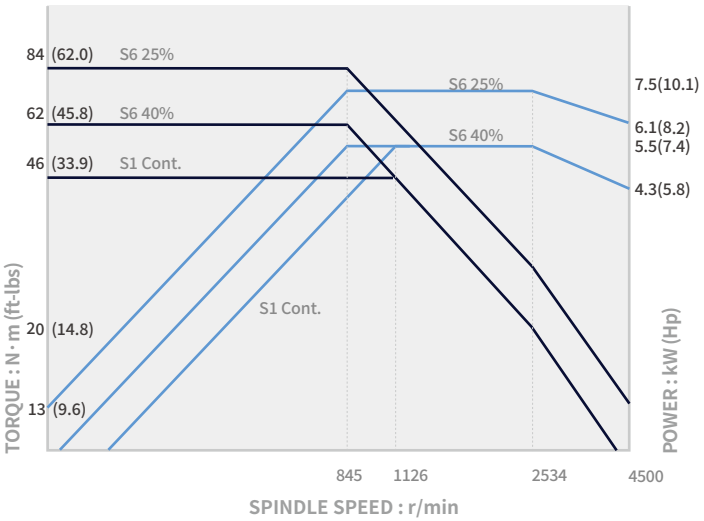

Rotary Tool Lynx 2600Y/SY 12st., 12st.(24st. positions OPTION)

Max. spindle speed
6000 r/min

Max. spindle power
5.5 kW (7.4 Hp)

Max. spindle torque
42 N·m (31.0 ft-lbs)

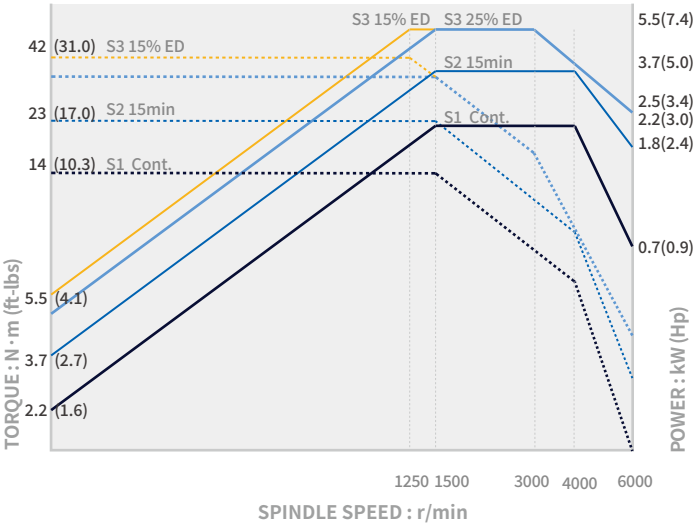

Rotary Tool Lynx 2600Y/SY 16st. OPTION

Max. spindle speed
6000 r/min

Max. spindle power
7.5 kW (10.1 Hp)

Max. spindle torque
47 N·m (34.7 ft-lbs)

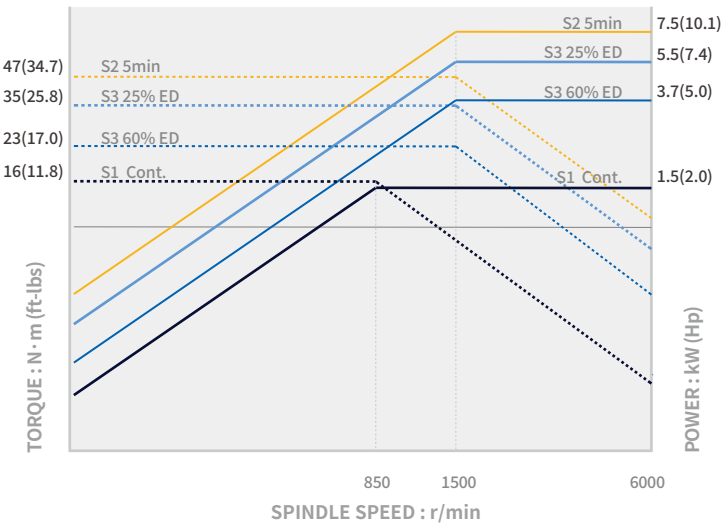

POWER | TORQUE

SIEMENS

Main Spindle Lynx 2600Y/SY

Max. spindle speed
3500 r/min

Max. spindle power
22.2 kW (29.8 Hp)

Max. spindle torque
402 N·m (296.7 ft-lbs)

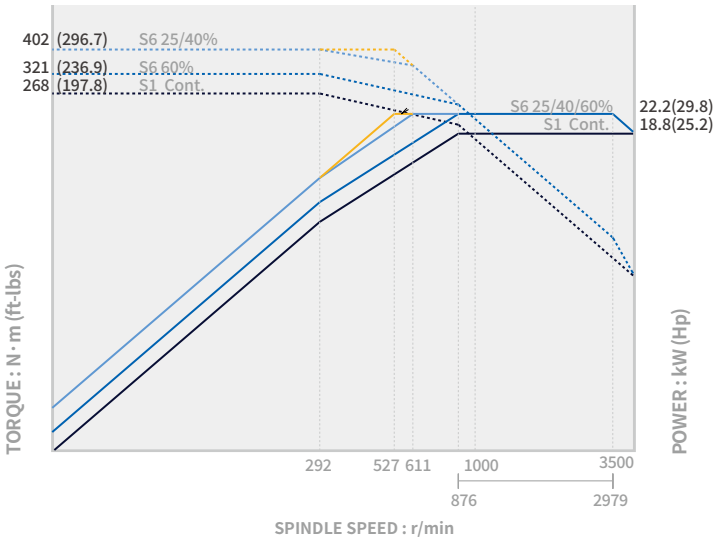

Sub-Spindle Lynx 2600Y/SY

Max. spindle speed
4500 r/min

Max. spindle power
8.4 kW (11.3 Hp)

Max. spindle torque
84 N·m (62.0 ft-lbs)

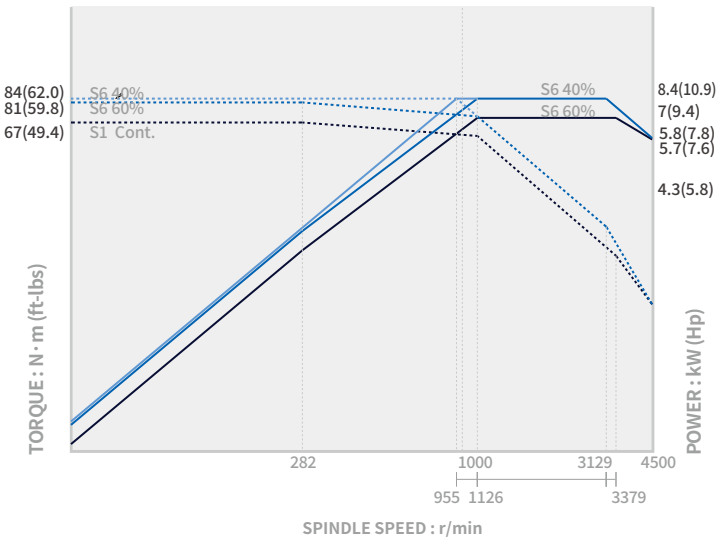

Rotary Tool Lynx 2600Y/SY 12st., 12st.(24st. positions OPTION)

Max. spindle speed
6000 r/min

Max. spindle power
6.2 kW (8.3 Hp)

Max. spindle torque
50 N·m (36.9 ft-lbs)

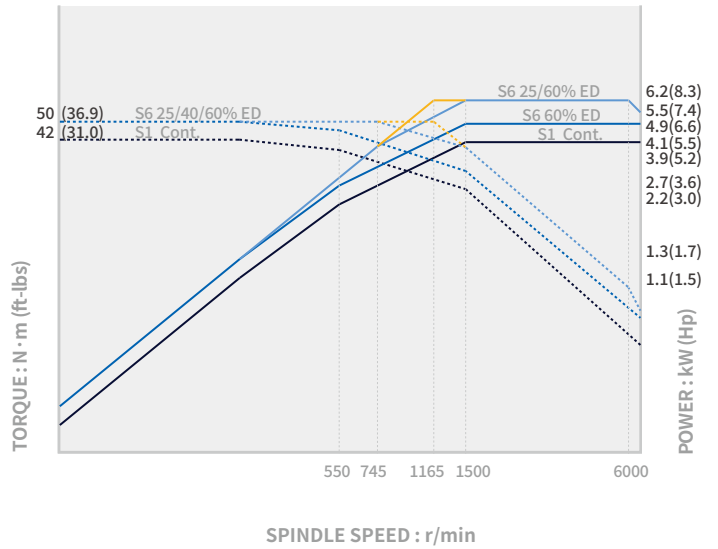

Rotary Tool Lynx 2600Y/SY 16st. OPTION

Max. spindle speed
6000 r/min

Max. spindle power
7.5 kW (10.1 Hp)

Max. spindle torque
47 N·m (34.7 ft-lbs)

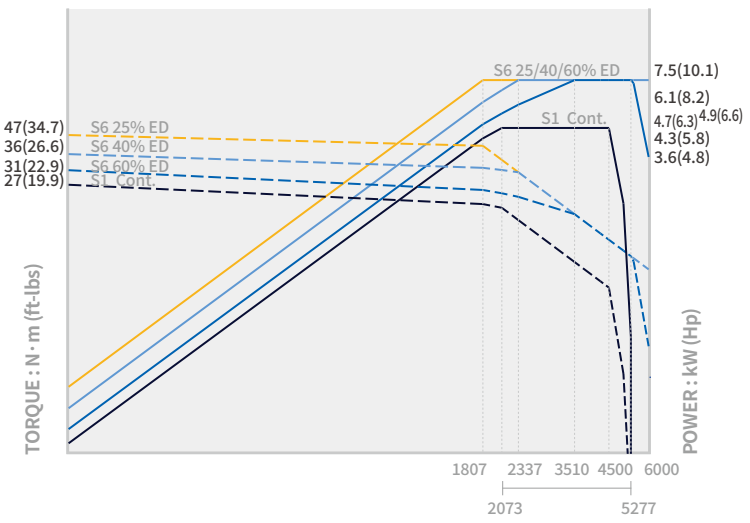

EXTERNAL DIMENSIONS

Lynx 2100LY series

Unit : mm(inch)

TOP

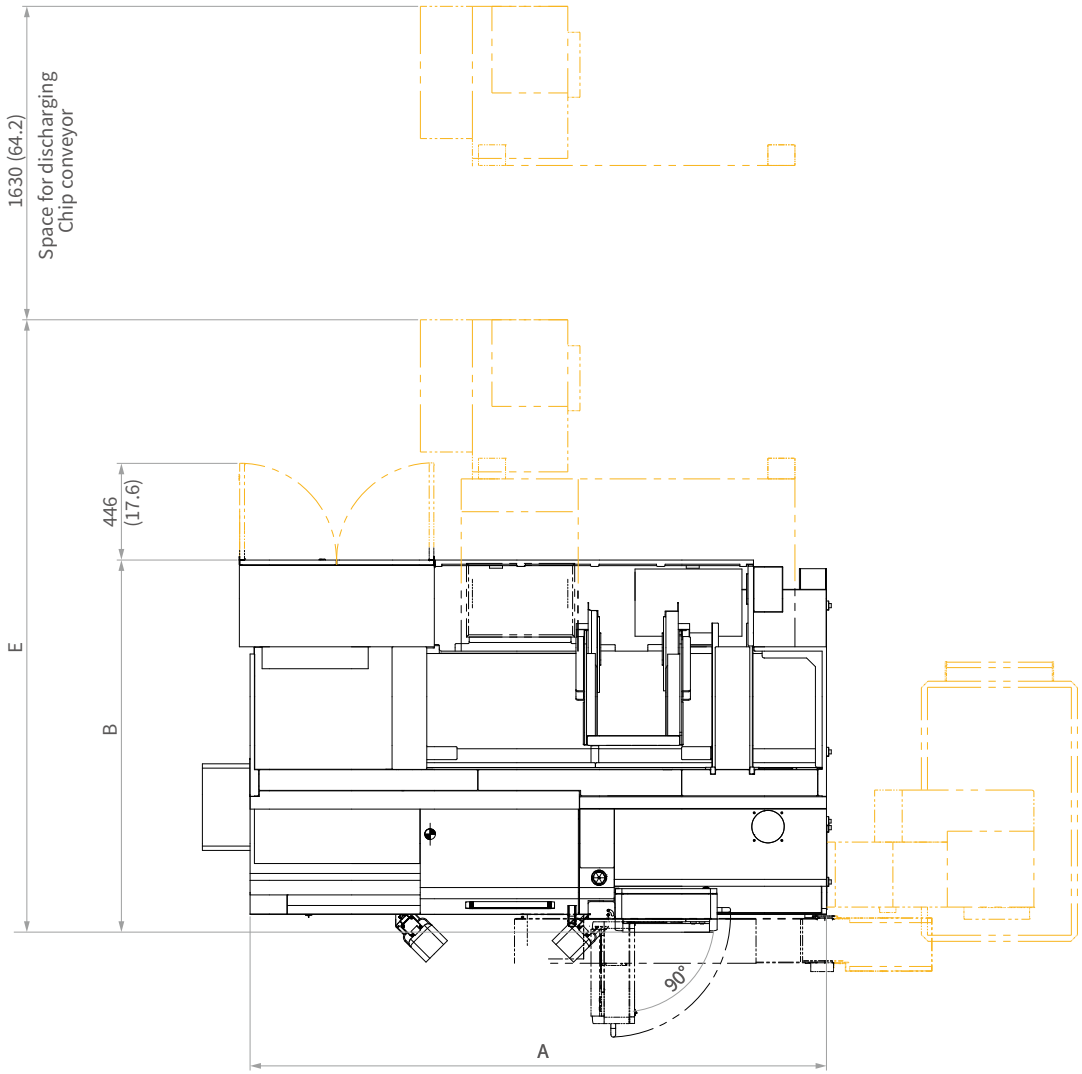

FRONT

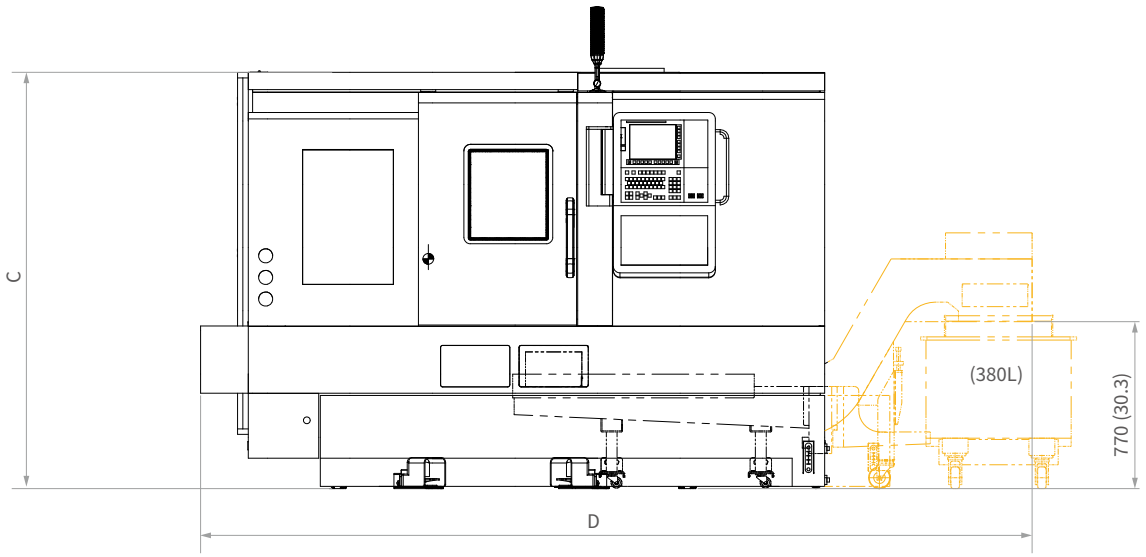

Model	A	B		C	D	E	
		FANUC	SIEMENS			FANUC	SIEMENS
Lynx 2100LYA / LYB **Lynx 2100LSYA / LSYB**	2660 (104.7)	1701 (67.0)	1754 (69.1)	1921 (75.6)	3838 (151.1)	2824 (111.2)	2827 (111.3)

** Some peripheral equipment can be placed in other places.*

EXTERNAL DIMENSIONS

Lynx 2600Y series

Unit : mm(inch)

TOP

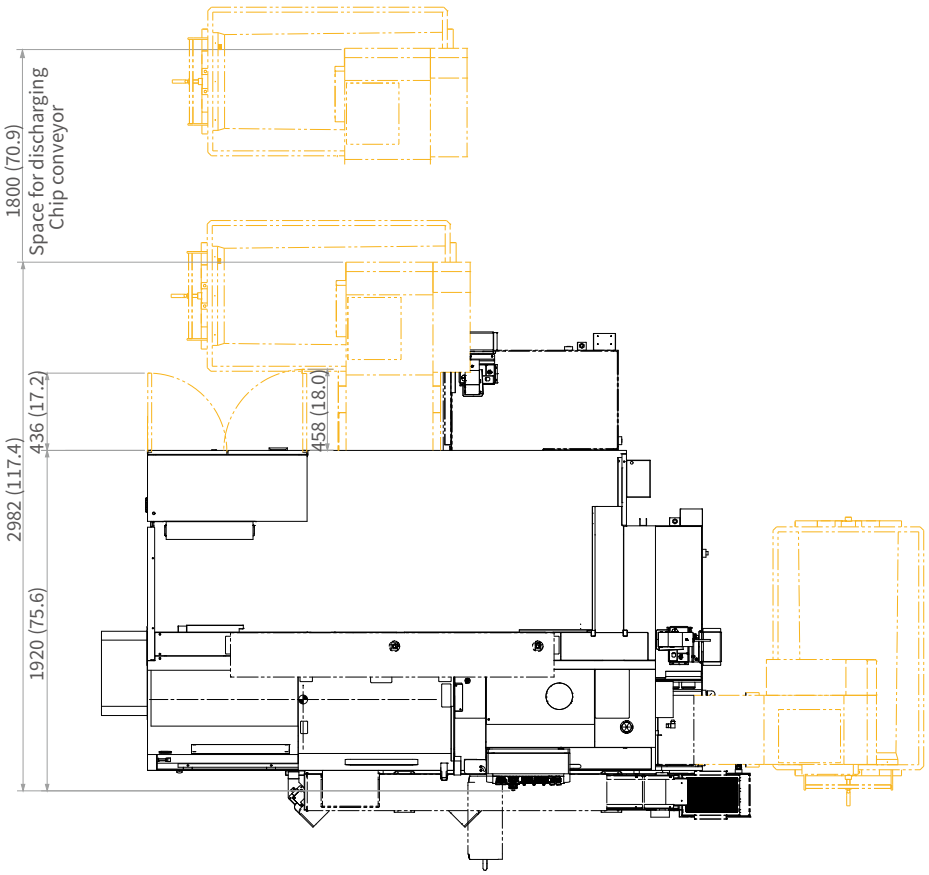

FRONT

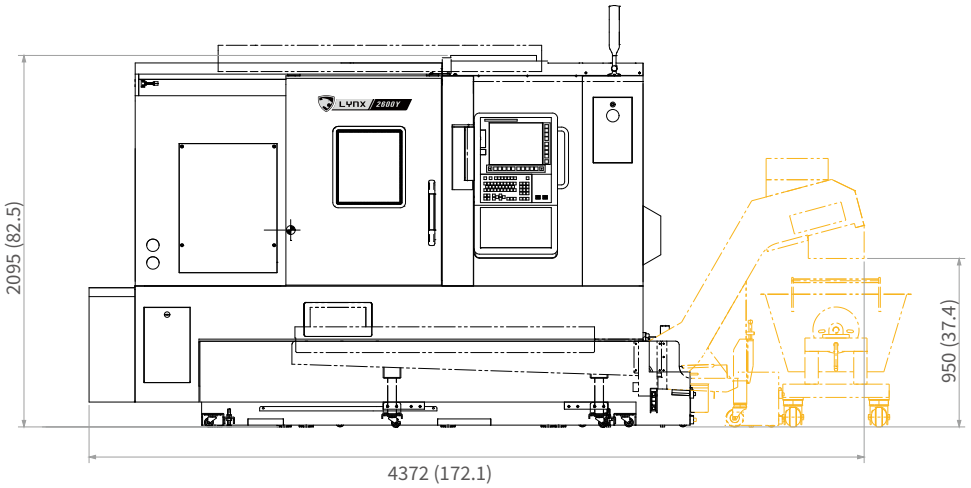

** Some peripheral equipment can be placed in other places.*

TOOL INTERFACE

Lynx 2100LY

Unit：mm(inch)

12 station (24position)

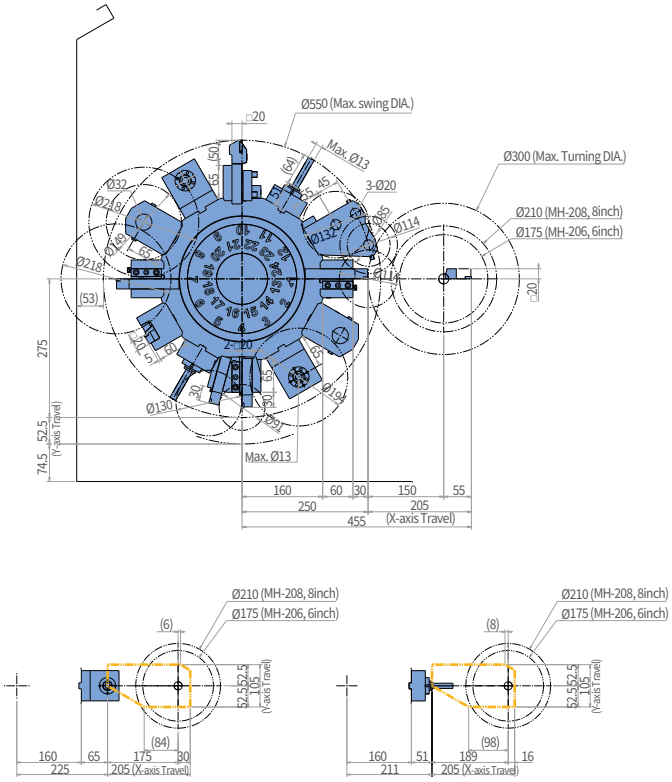

16 station

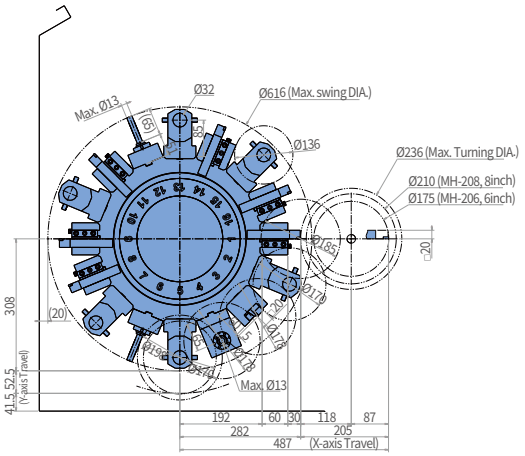

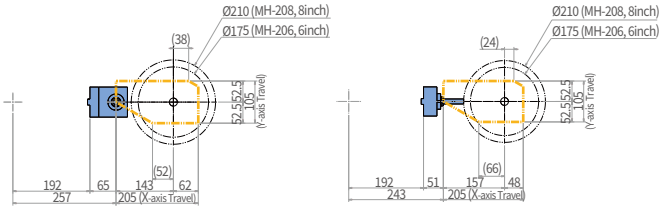

Lynx 2100LSY

12 station (24position)

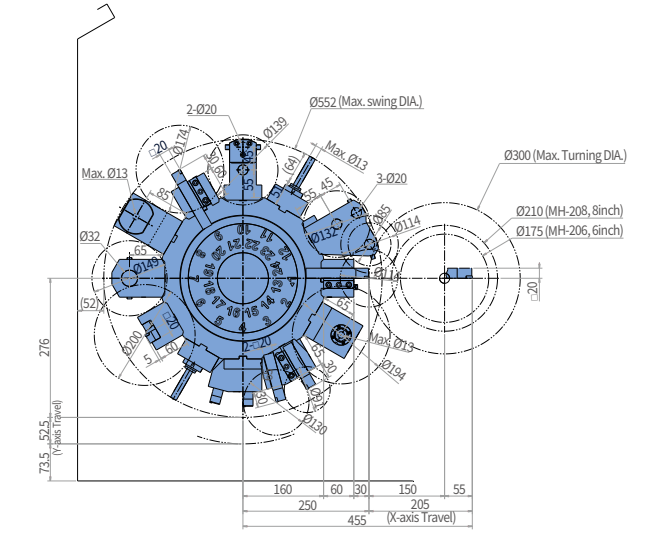

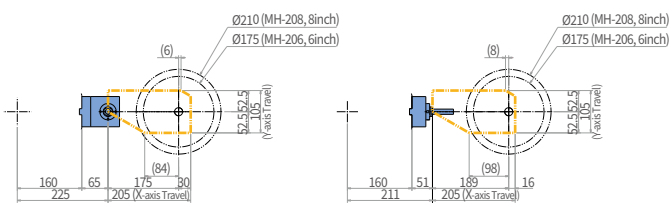

16 station

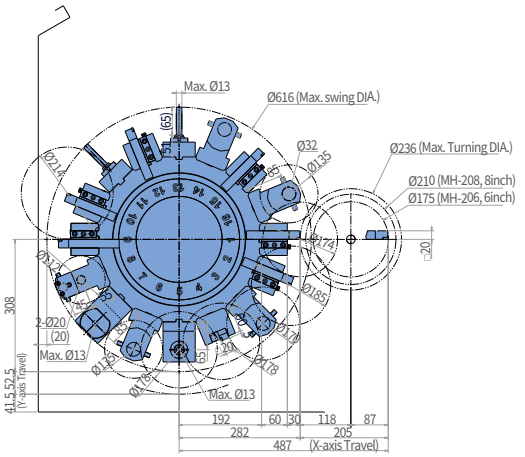

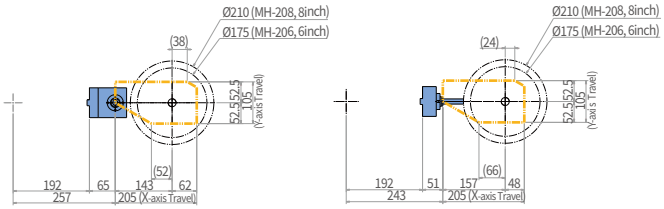

TOOL INTERFACE

Lynx 2600Y

Unit : mm(inch)

12 station

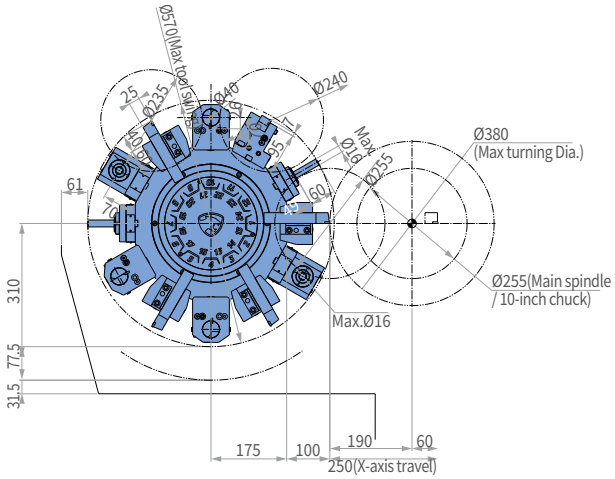

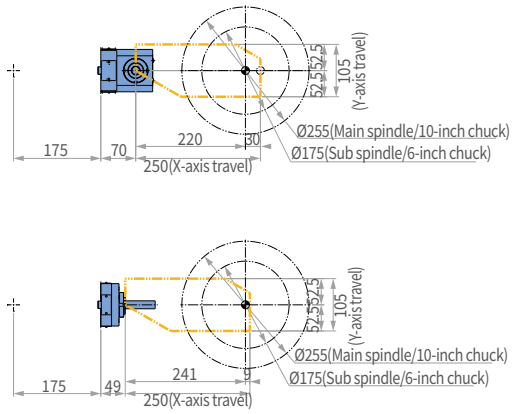

16 station

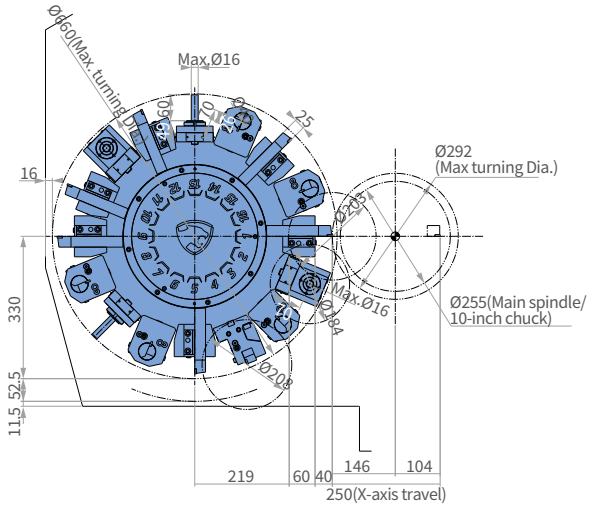

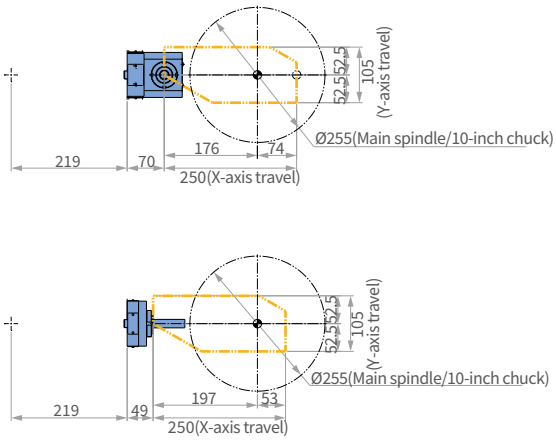

12 station (24position)

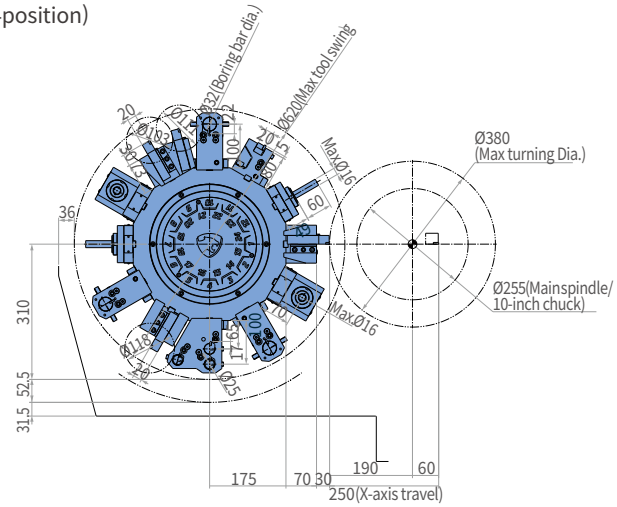

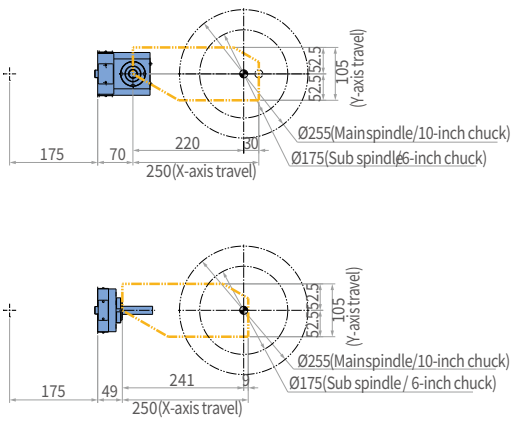

TOOL INTERFACE

Lynx 2600SY

Unit : mm(inch)

12 station

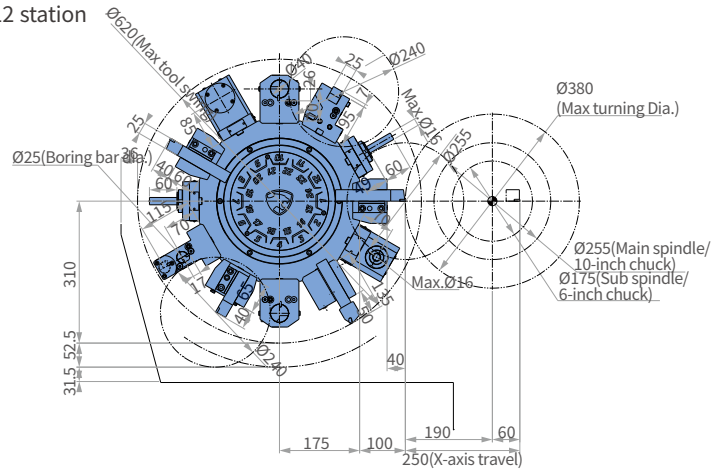

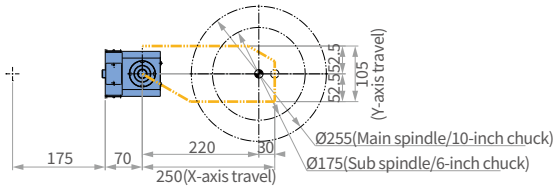

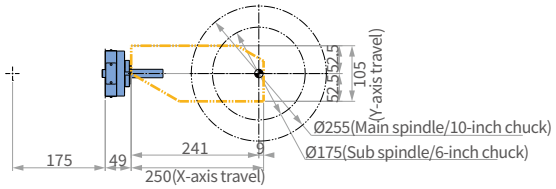

16 station

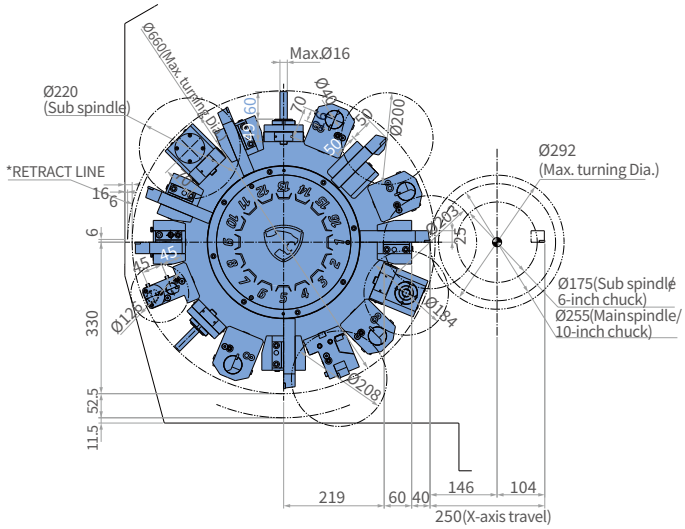

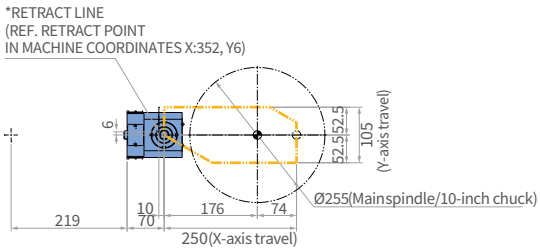

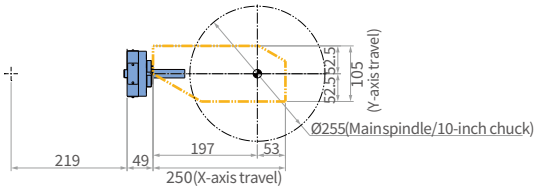

12 station (24position)

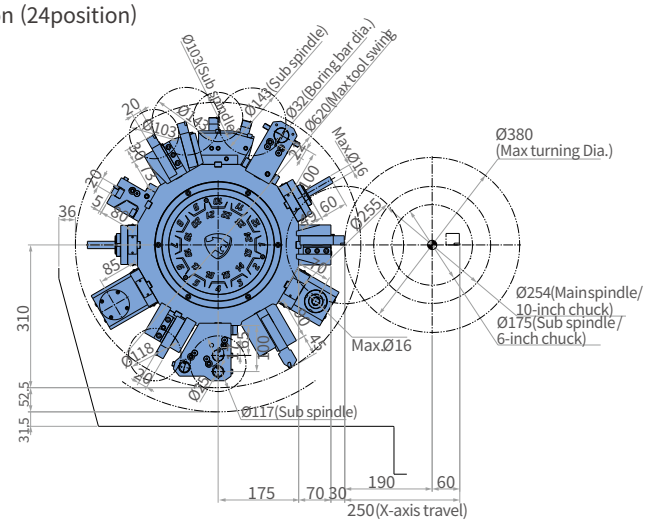

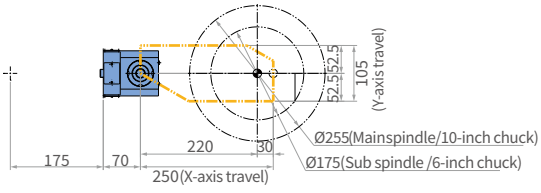

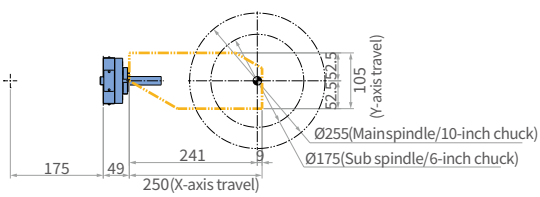

TOOLING SYSTEM

Lynx 2100LY

Unit : mm(inch)

12 station

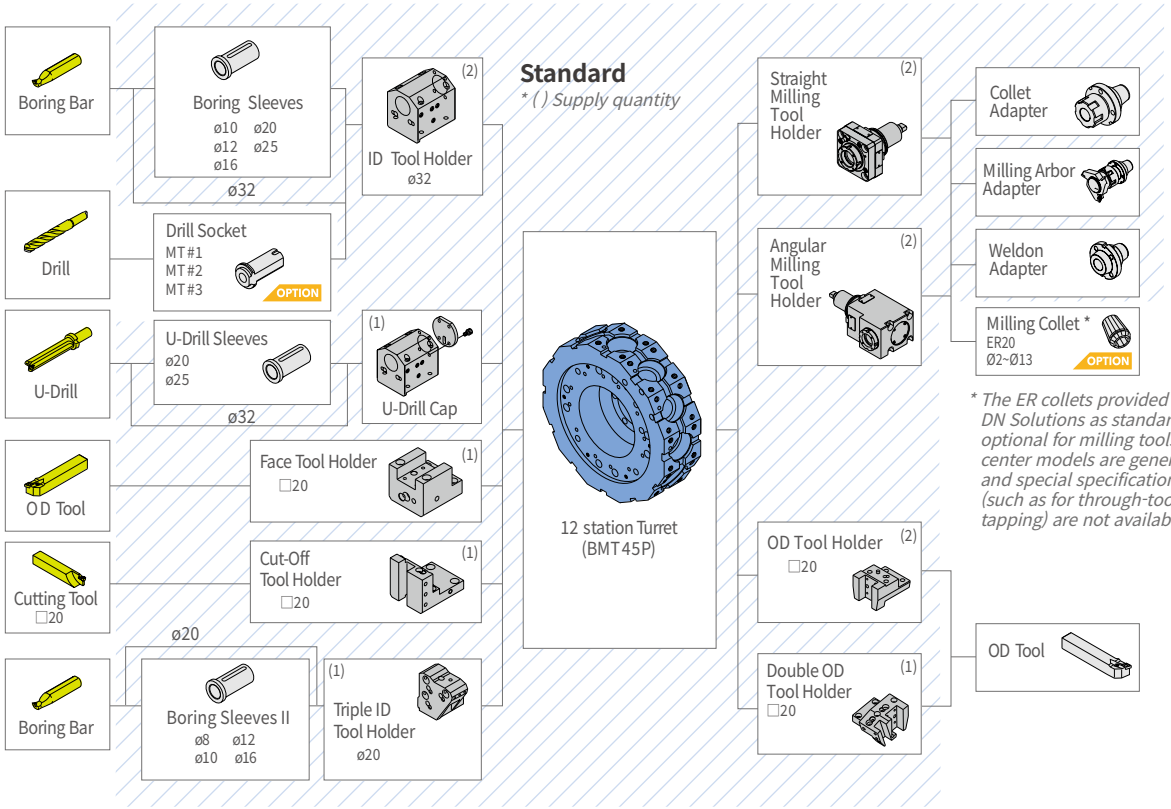

* *The ER collets provided by DN Solutions as standard or optional for milling tools on turning center models are general type only, and special specification collets (such as for through-tool coolant or tapping) are not available.*

16 station

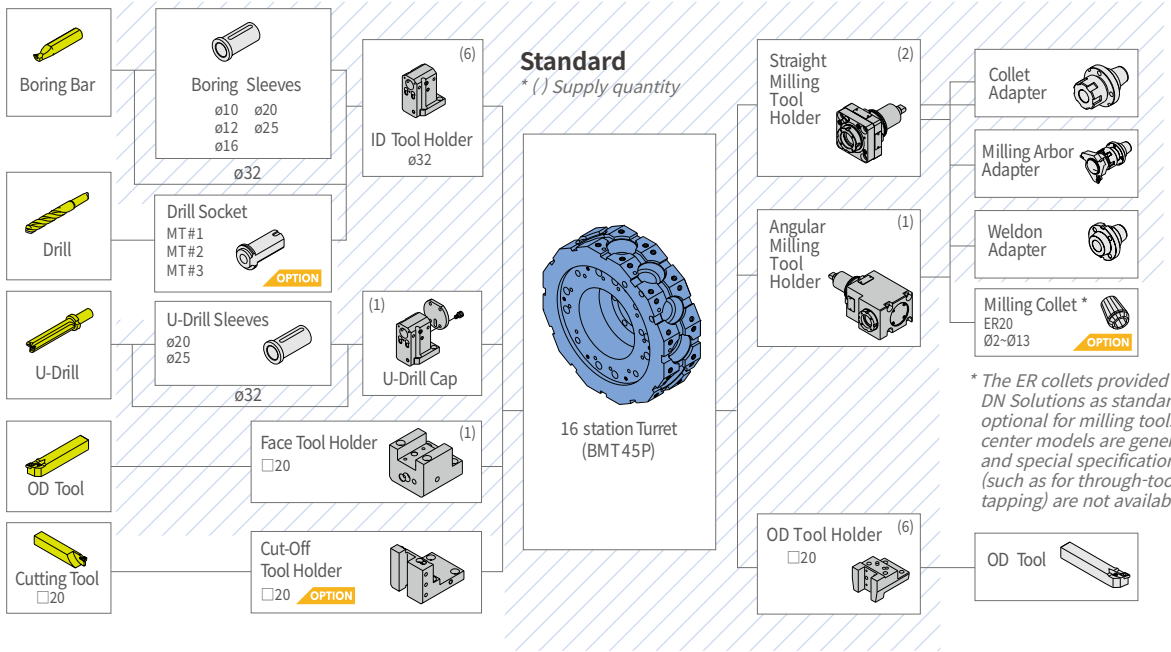

* *The ER collets provided by DN Solutions as standard or optional for milling tools on turning center models are general type only, and special specification collets (such as for through-tool coolant or tapping) are not available.*

TOOLING SYSTEM

Lynx 2100LSY

Unit : mm(inch)

12 station

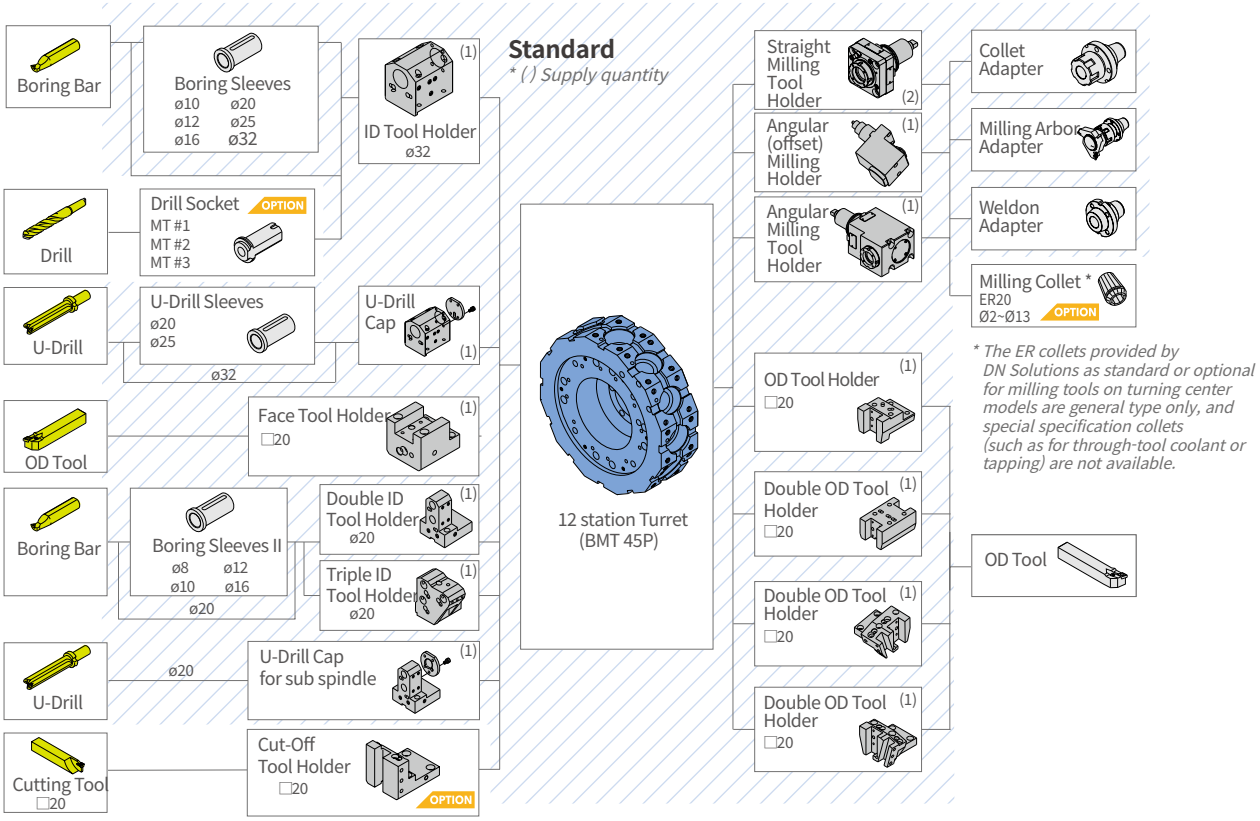

** The ER collets provided by DN Solutions as standard or optional for milling tools on turning center models are general type only, and special specification collets (such as for through-tool coolant or tapping) are not available.*

16 station

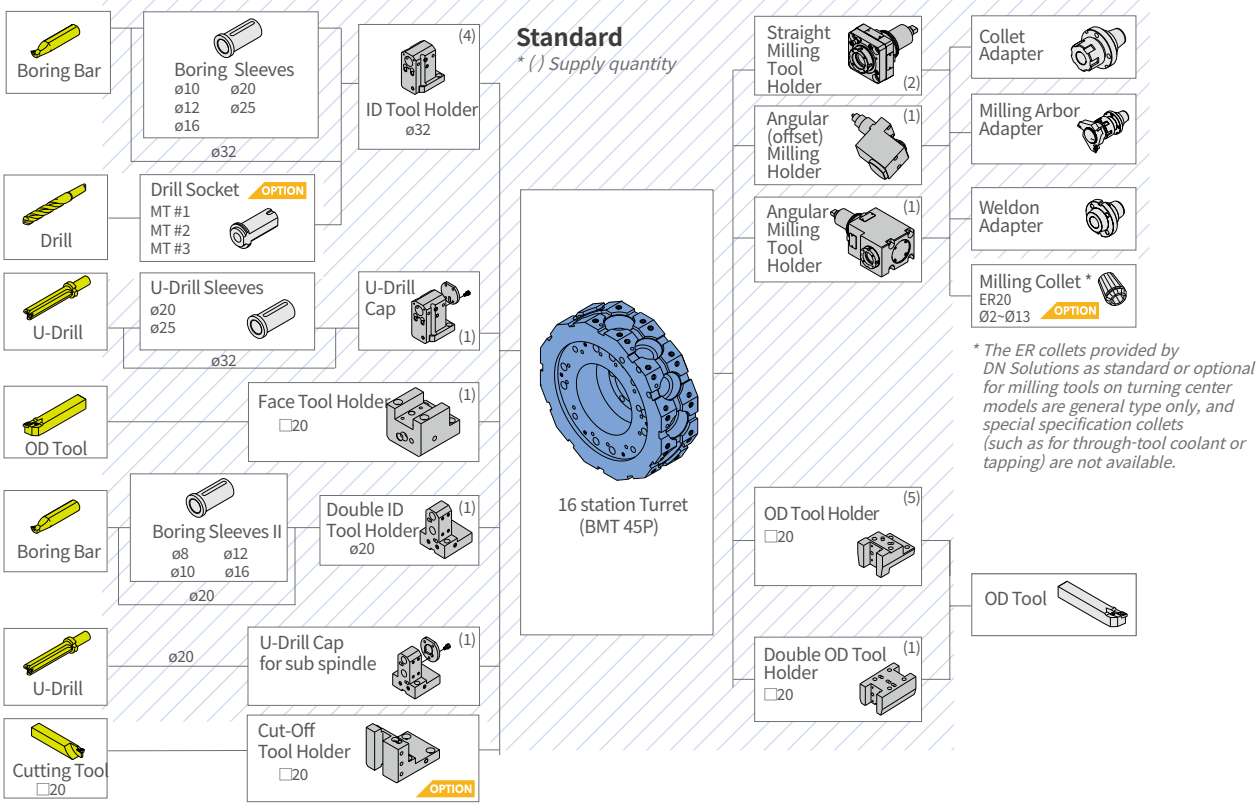

** The ER collets provided by DN Solutions as standard or optional for milling tools on turning center models are general type only, and special specification collets (such as for through-tool coolant or tapping) are not available.*

TOOLING SYSTEM

Lynx 2600Y

Unit : mm(inch)

12 station

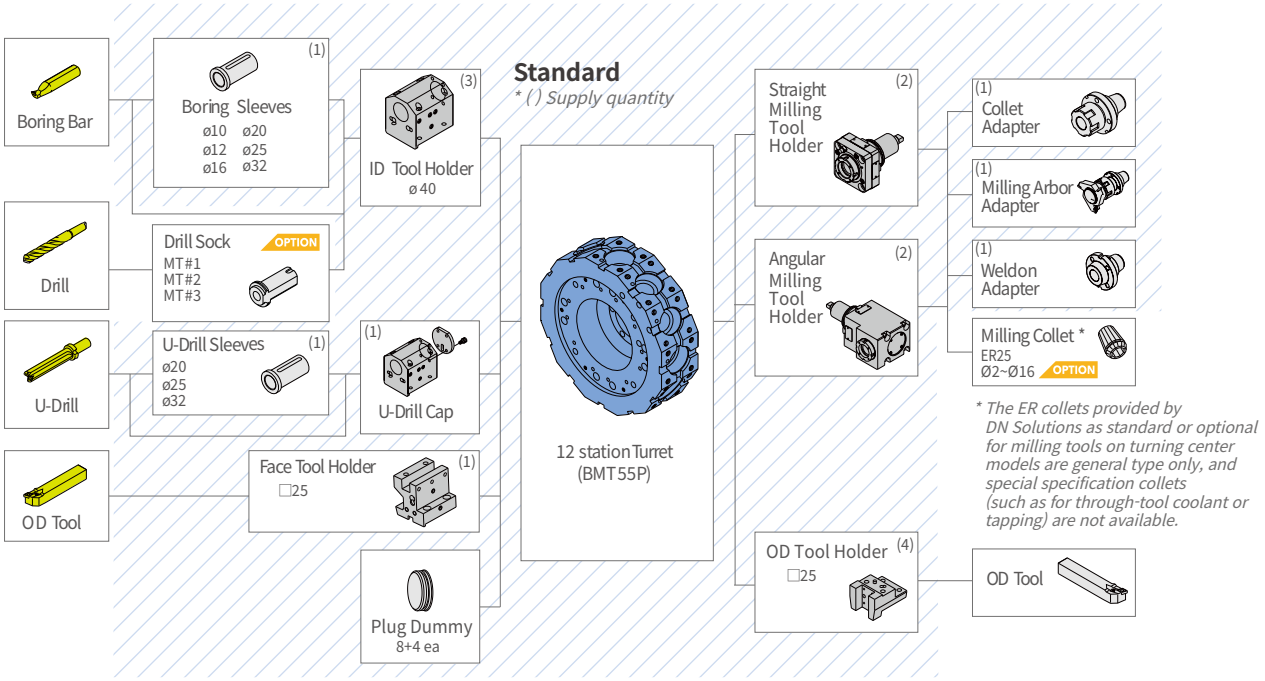

* The ER collets provided by DN Solutions as standard or optional for milling tools on turning center models are general type only, and special specification collets (such as for through-tool coolant or tapping) are not available.

16 station

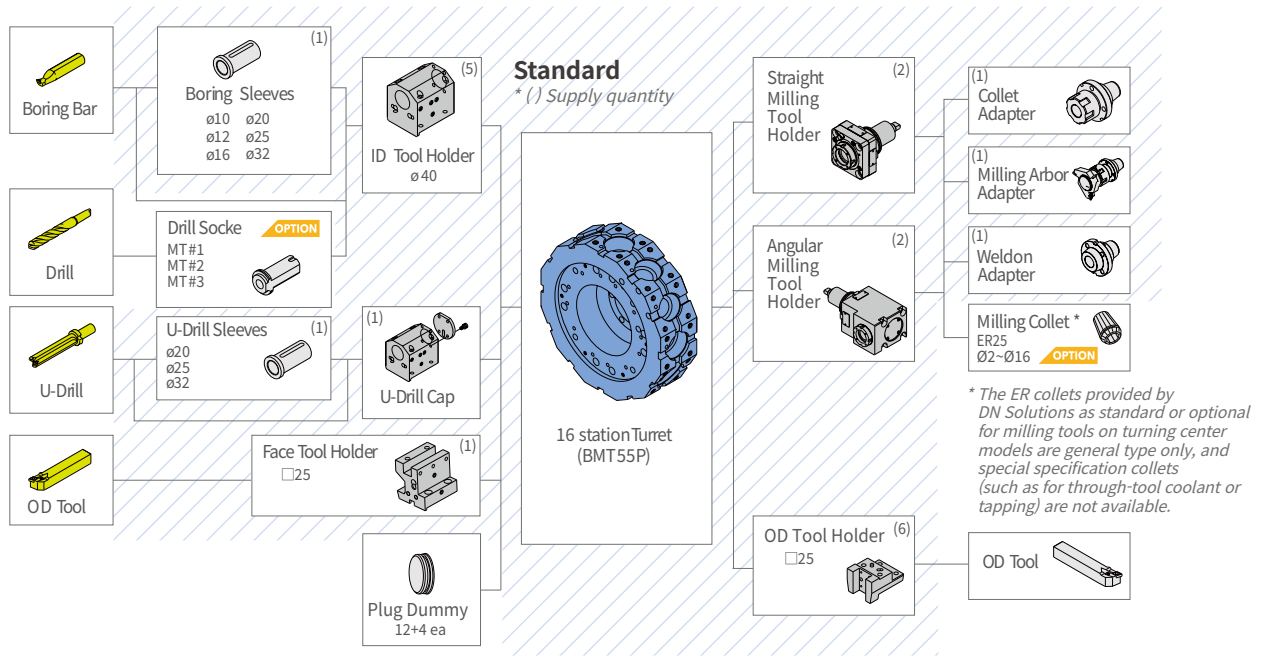

* The ER collets provided by DN Solutions as standard or optional for milling tools on turning center models are general type only, and special specification collets (such as for through-tool coolant or tapping) are not available.

TOOLING SYSTEM

Lynx 2600Y

Unit : mm(inch)

24 station

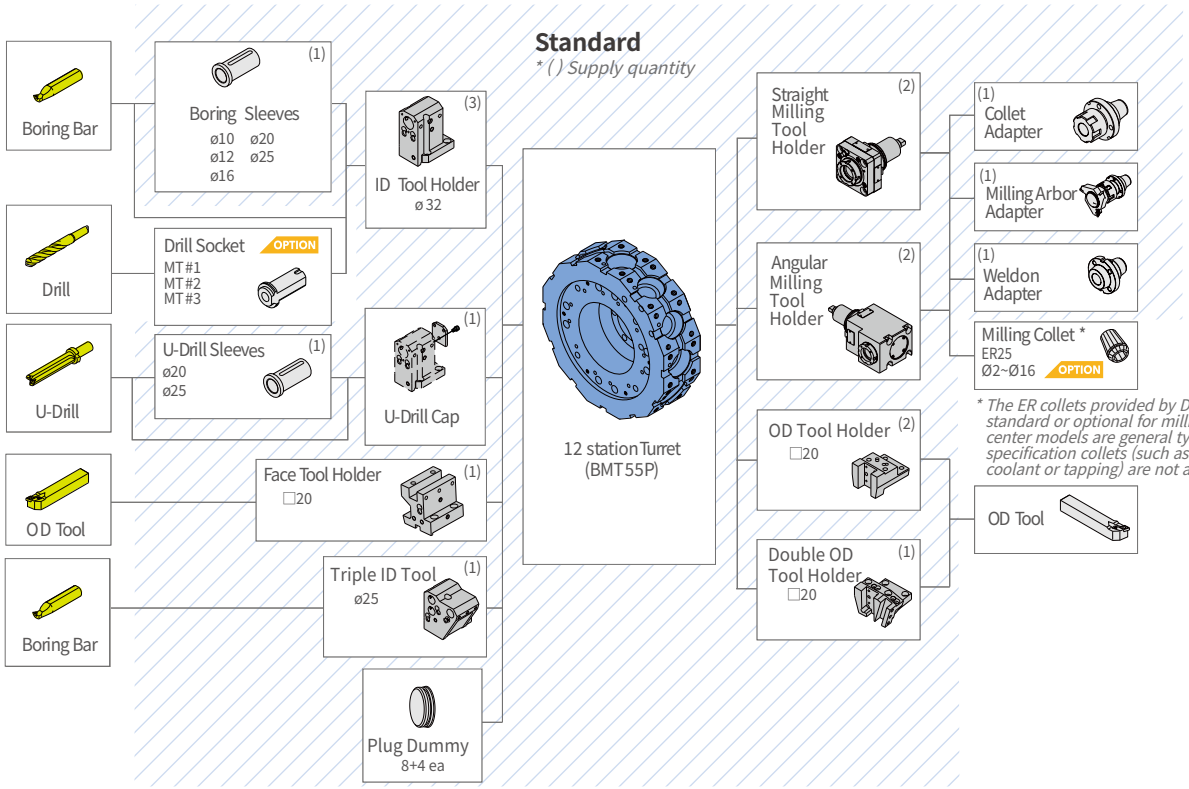

* The ER collets provided by DN Solutions as standard or optional for milling tools on turning center models are general type only, and special specification collets (such as for through-tool coolant or tapping) are not available.

Lynx 2600SY

12 station

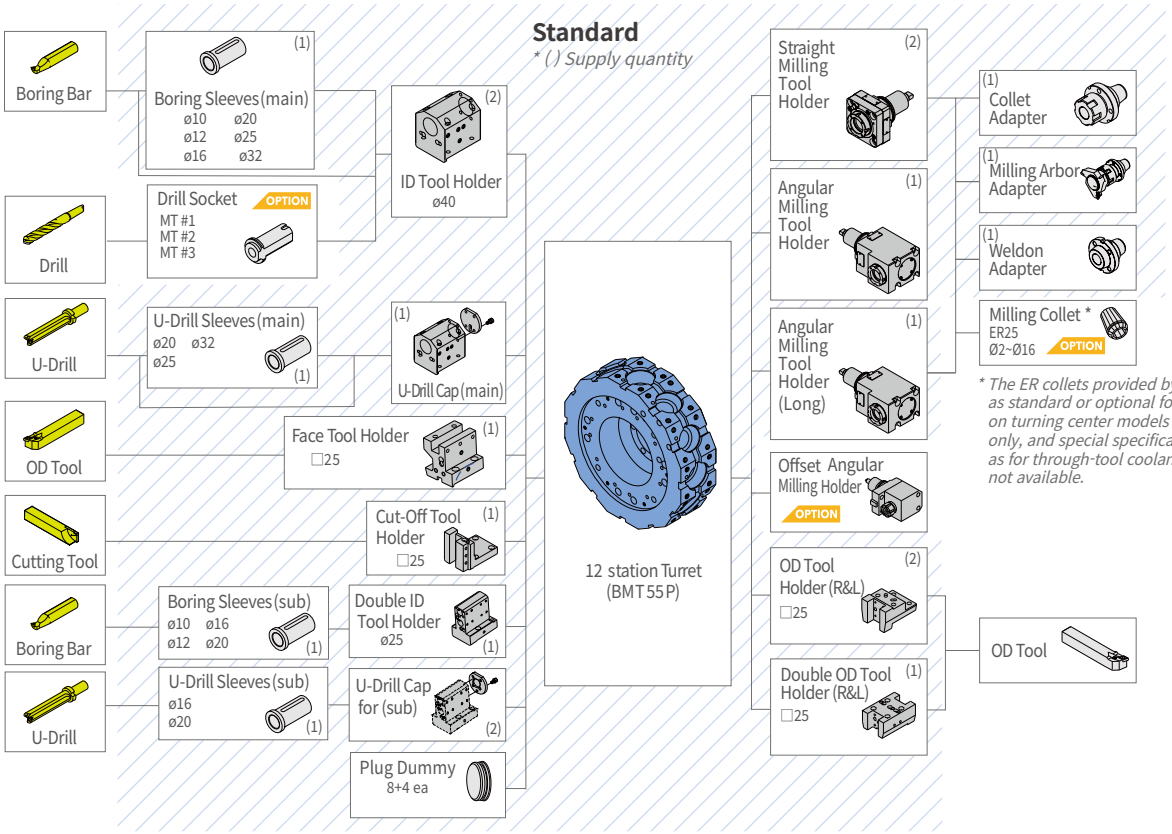

* The ER collets provided by DN Solutions as standard or optional for milling tools on turning center models are general type only, and special specification collets (such as for through-tool coolant or tapping) are not available.

TOOLING SYSTEM

Lynx 2600SY

Unit : mm(inch)

16 station

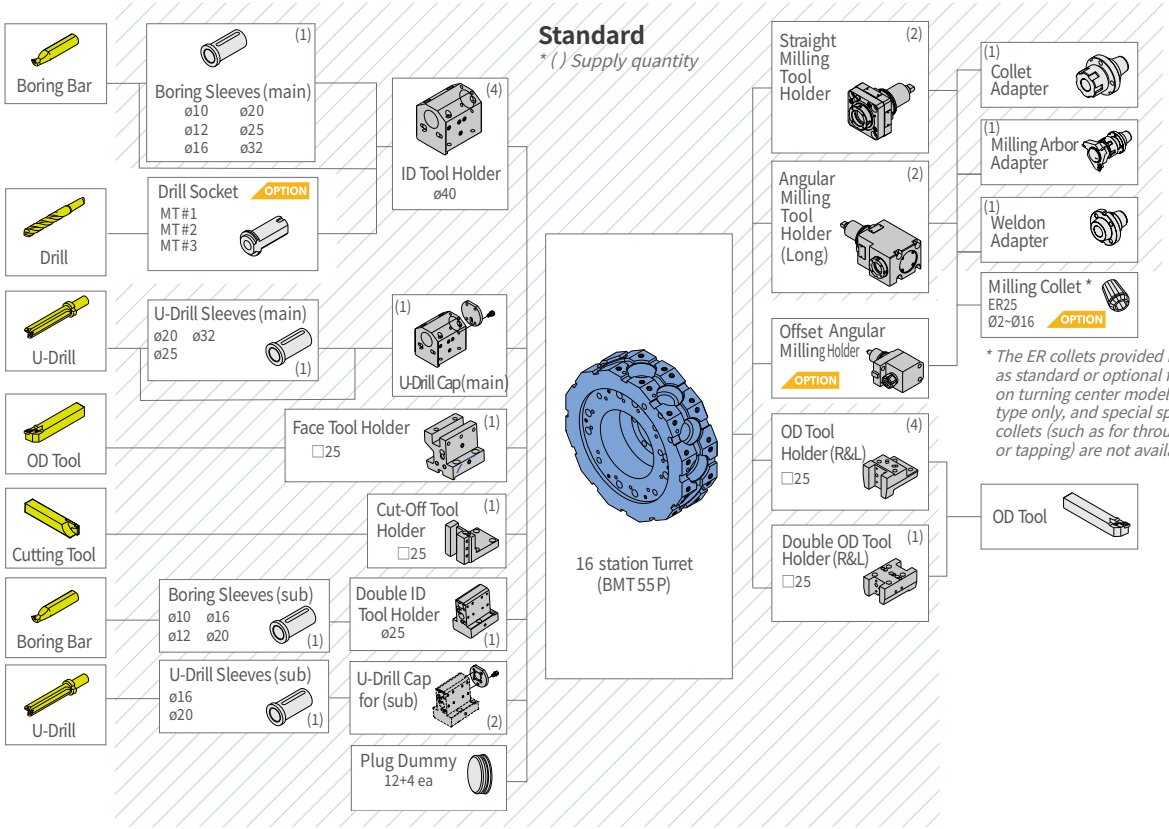

** The ER collets provided by DN Solutions as standard or optional for milling tools on turning center models are general type only, and special specification collets (such as for through-tool coolant or tapping) are not available.*

24 station

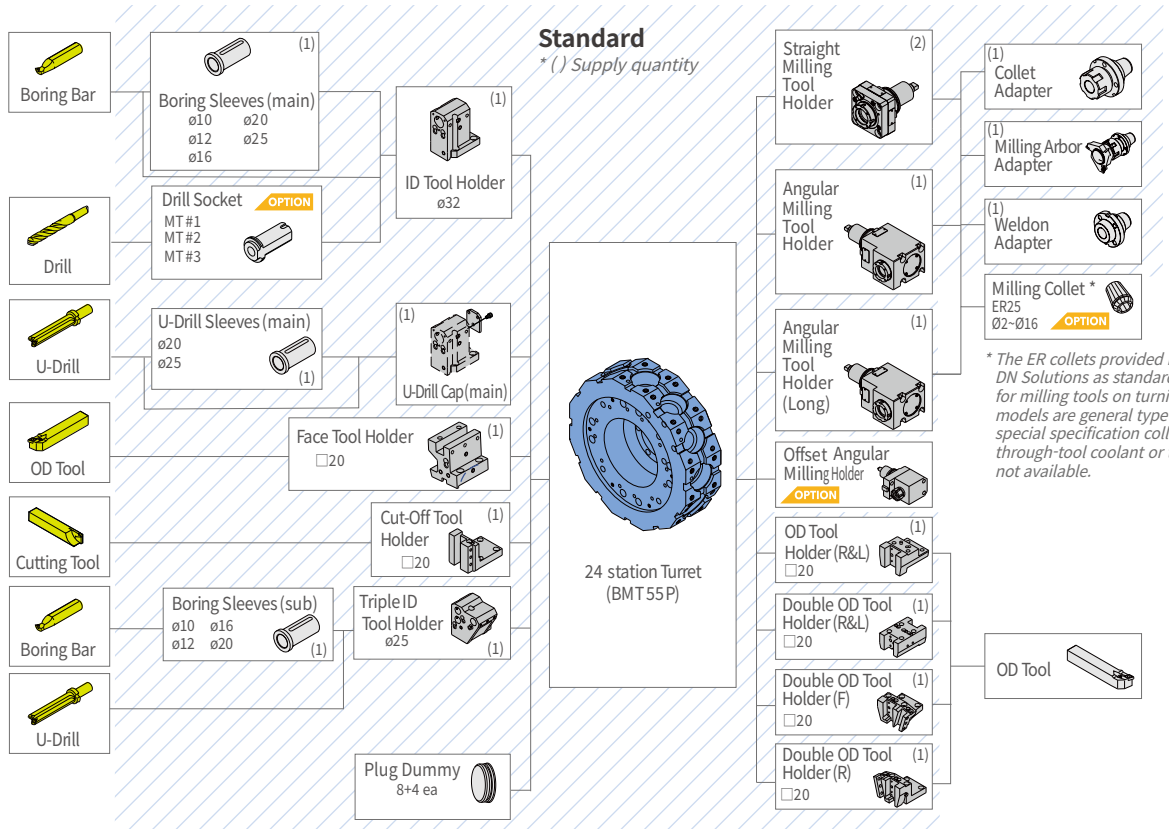

** The ER collets provided by DN Solutions as standard or optional for milling tools on turning center models are general type only, and special specification collets (such as for through-tool coolant or tapping) are not available.*

WORKING RANGE

Lynx 2100LY_ 24 station

Unit : mm(inch)

(A) : 6 inch
(B) : 8 inch

ID HOLDER

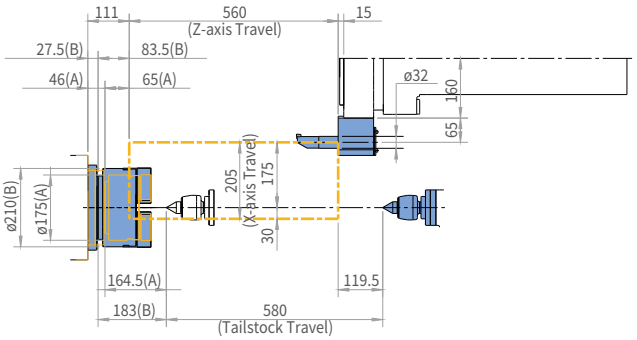

OD HOLDER

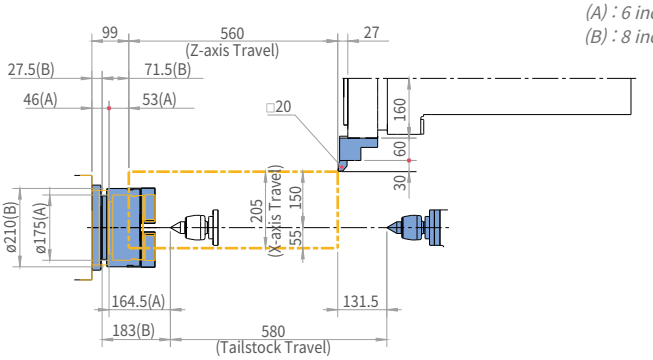

FACE TOOL HOLDER

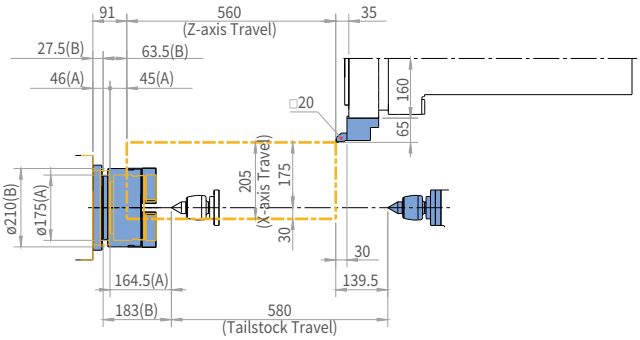

DOUBLE OD HOLDER(MAIN)

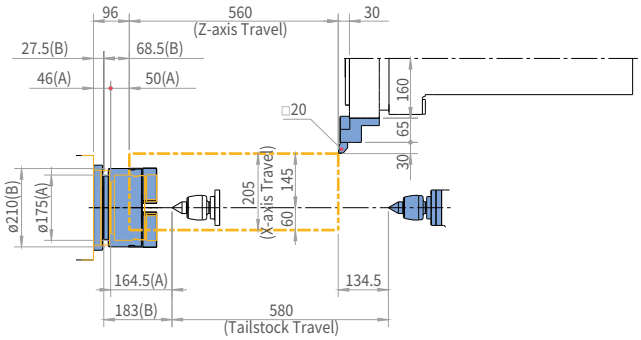

STRAIGHT MILLING HOLDER

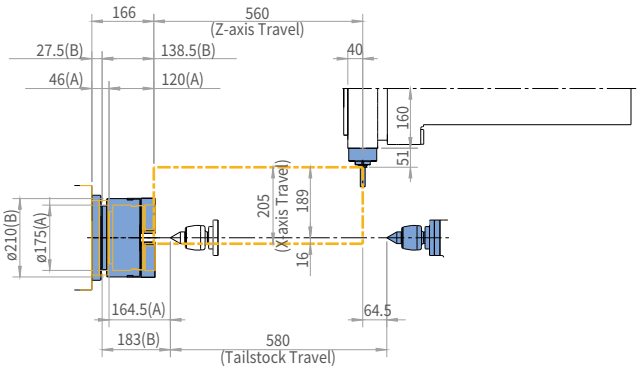

ANGULAR MILLING HOLDER

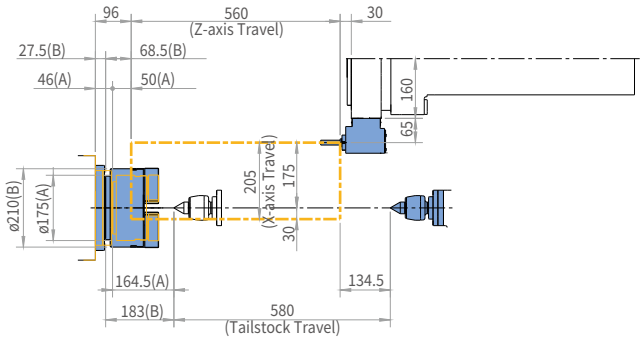

TRIPLE ID HOLDER

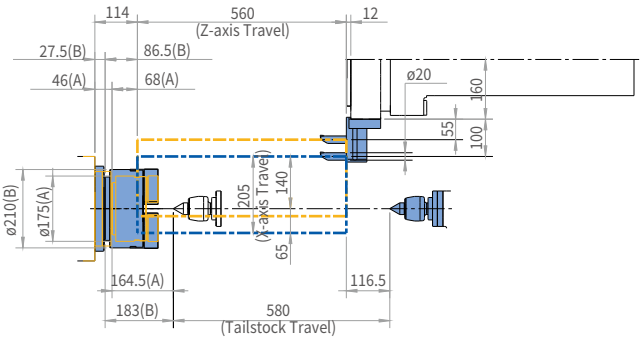

WORKING RANGE

Lynx 2100LY_ 16 station

Unit : mm(inch)

(A) : 6 inch
(B) : 8 inch

ID HOLDER

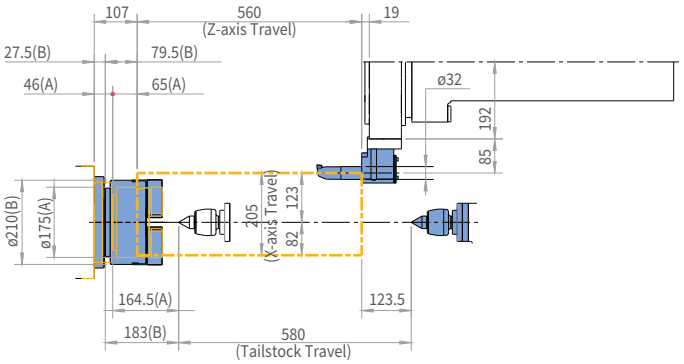

OD HOLDER

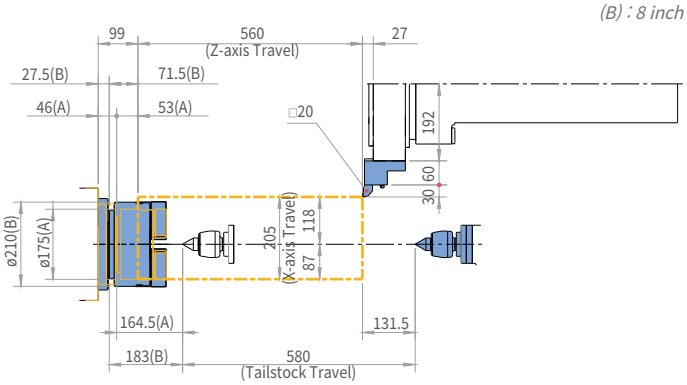

FACE TOOL HOLDER

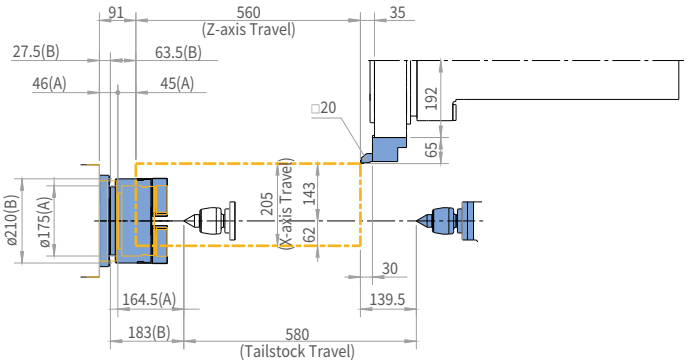

STRAIGHT MILLING HOLDER

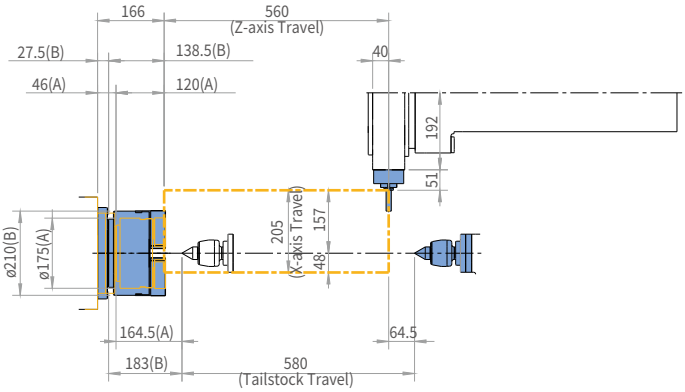

ANGULAR MILLING HOLDER

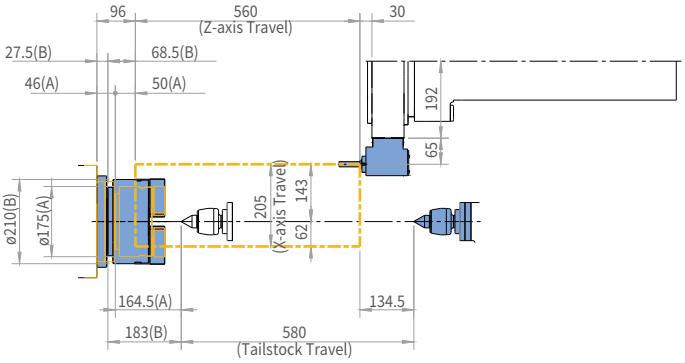

WORKING RANGE

Lynx 2100LSY_ 24 station

Unit : mm(inch)

(A) : 6 inch
(B) : 8 inch

ID HOLDER

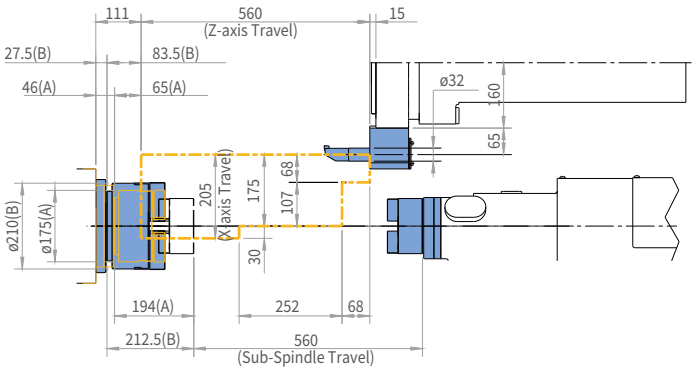

OD HOLDER

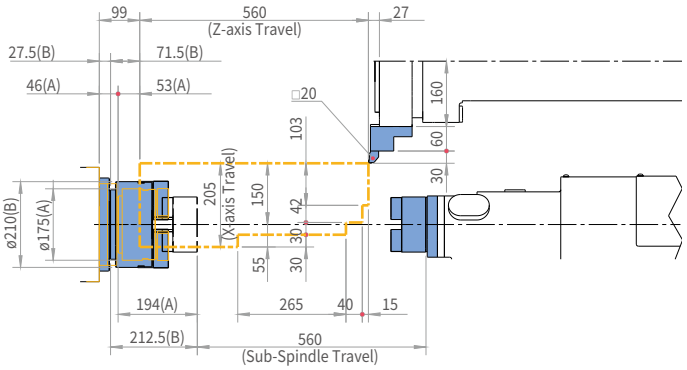

FACE TOOL HOLDER

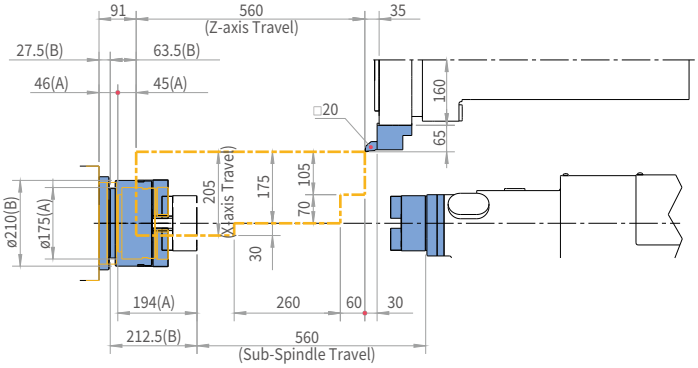

DOUBLE OD HOLDER(MAIN)

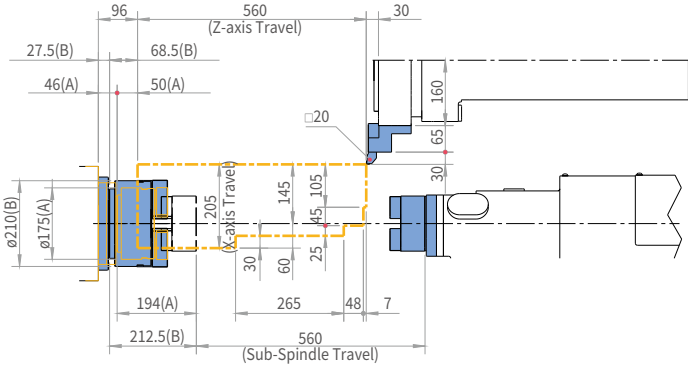

TRIPLE ID HOLDER

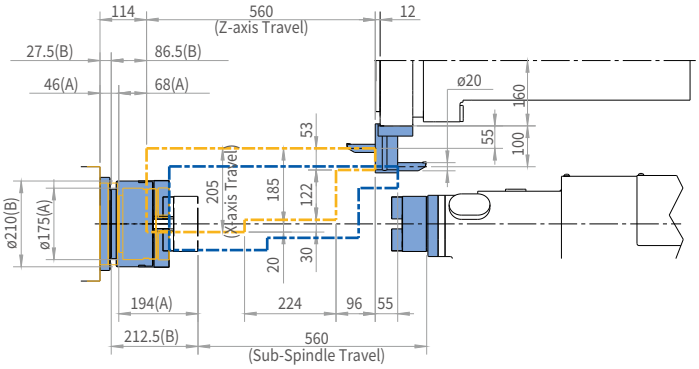

STRAIGHT MILLING HOLDER

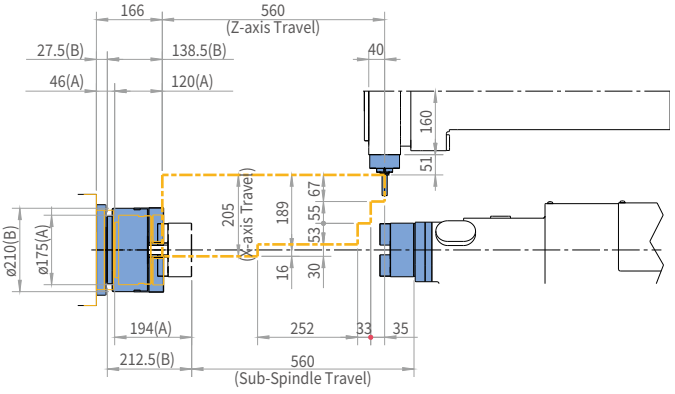

WORKING RANGE

Lynx 2100LSY_ 24 station

Unit : mm(inch)

(A) : 6 inch
(B) : 8 inch

ANGULAR MILLING HOLDER

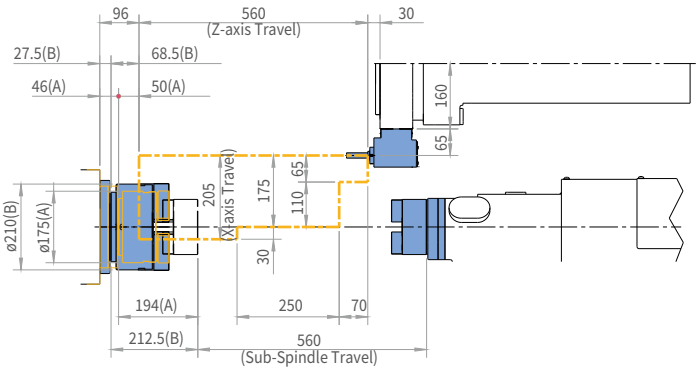

DOUBLE ID HOLDER

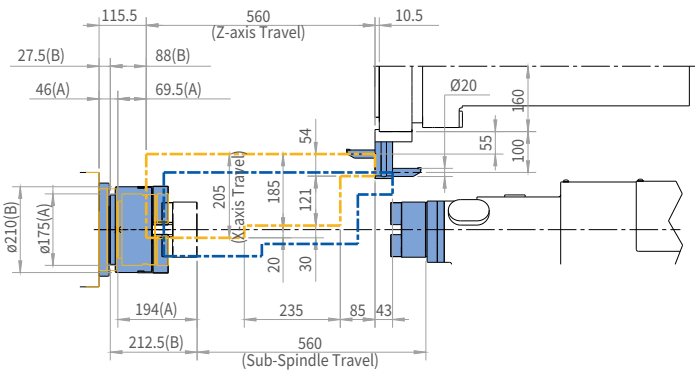

DOUBLE OD HOLDER(SUB)

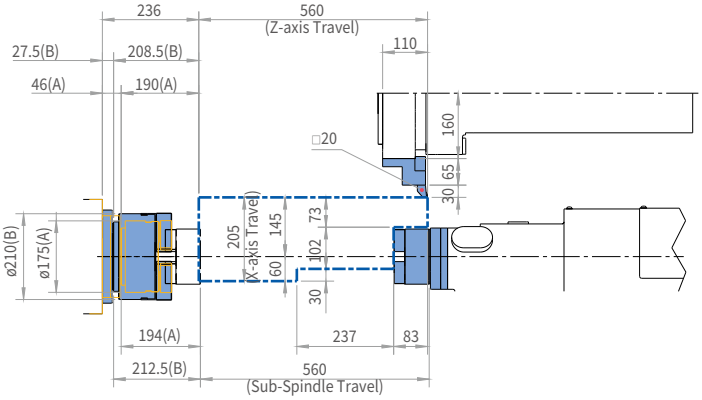

DOUBLE OD HOLDER(MAIN/SUB)

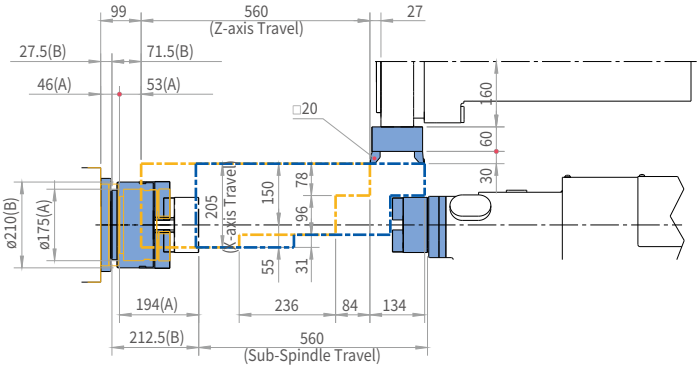

OFFSET ANGULAR MILLING HOLDER

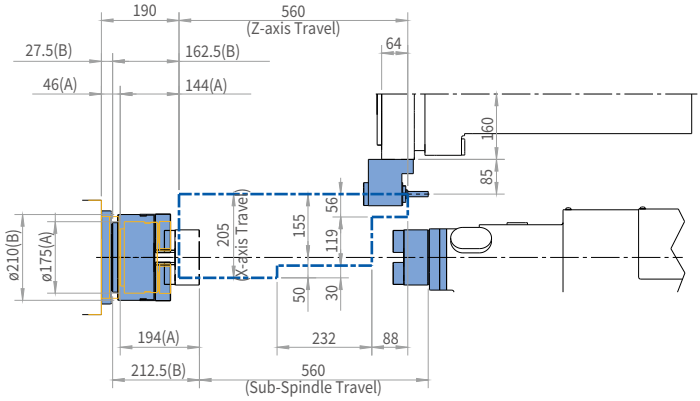

WORKING RANGE

Lynx 2100LSY_ 16 station

Unit : mm(inch)

(A) : 6 inch
(B) : 8 inch

ID HOLDER

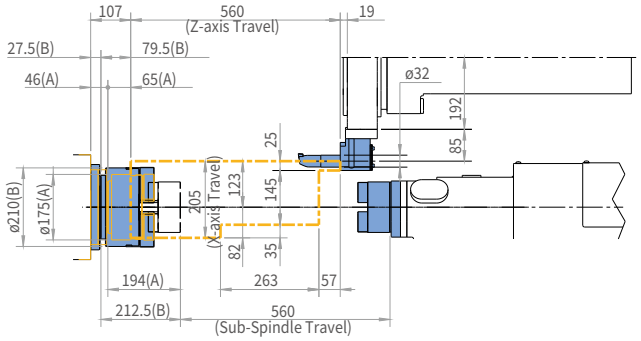

OD HOLDER

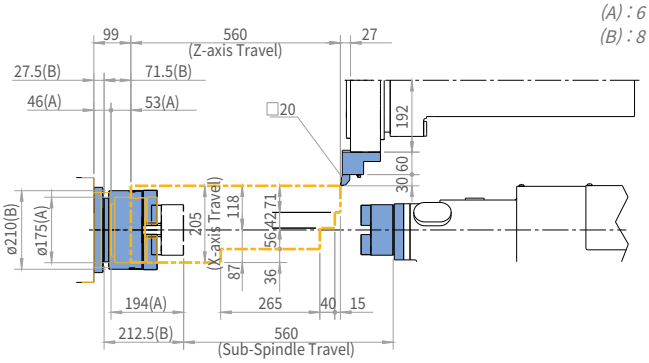

FACE TOOL HOLDER

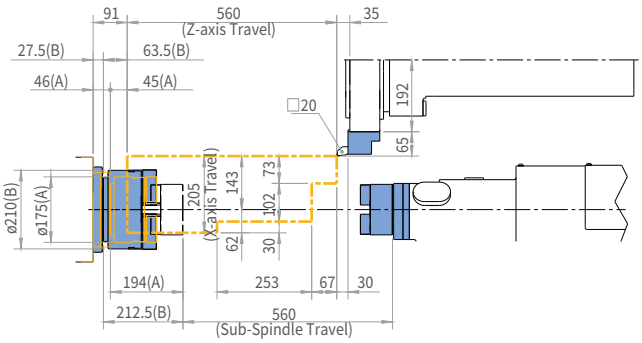

DOUBLE OD HOLDER(MAIN/SUB)

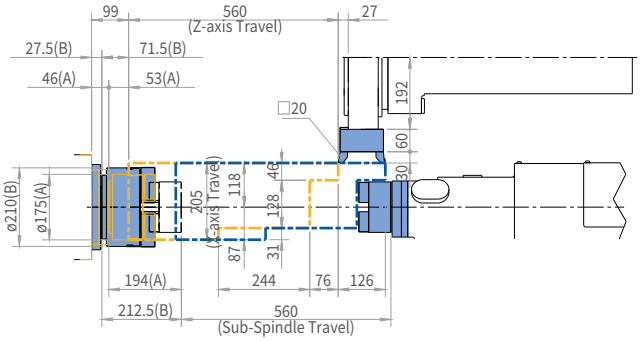

ANGULAR MILLING HOLDER

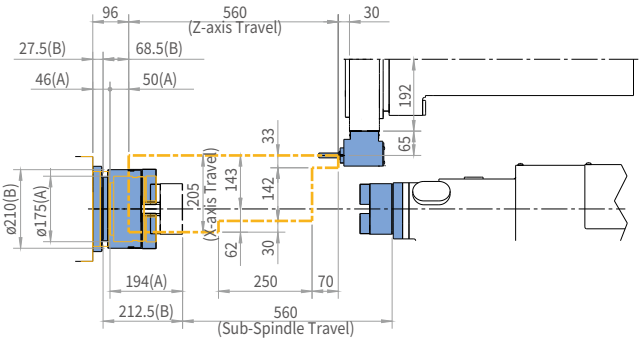

OFFSET ANGULAR MILLING HOLDER

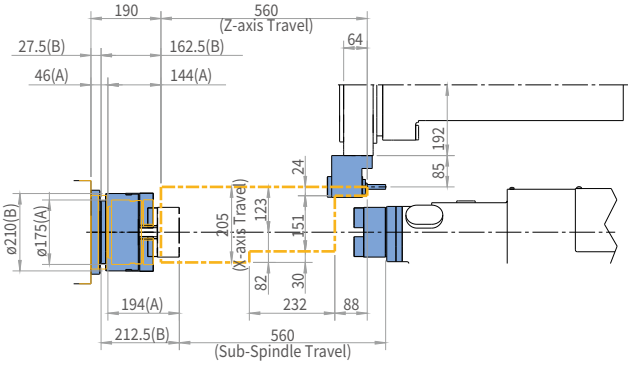

DOUBLE ID HOLDER

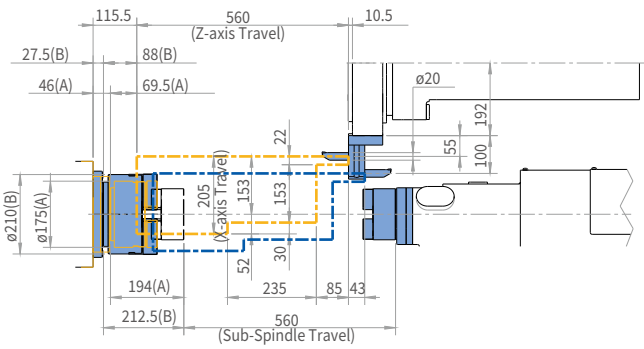

STRAIGHT MILLING HOLDER

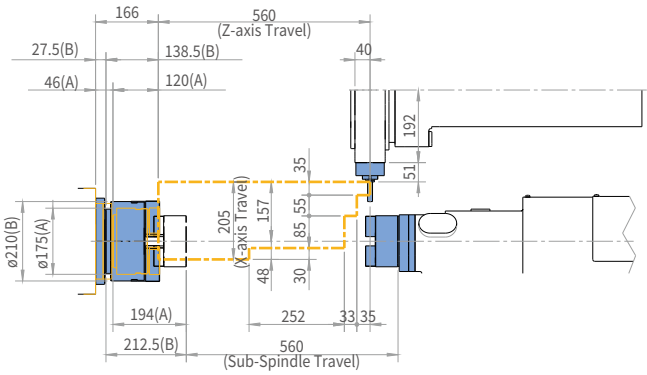

WORKING RANGE

Lynx 2600Y_12 station

Unit : mm(inch)

ID HOLDER

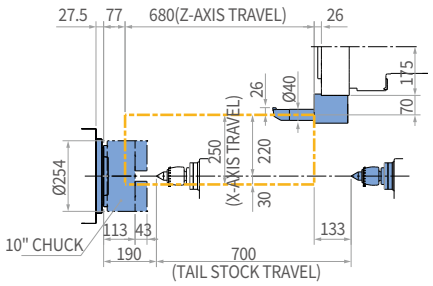

OD HOLDER

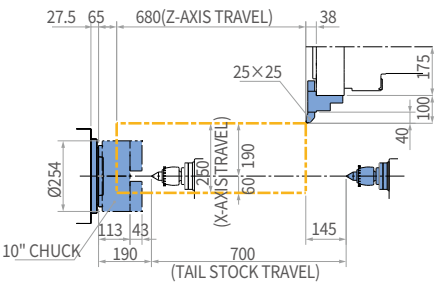

FACE HOLDER

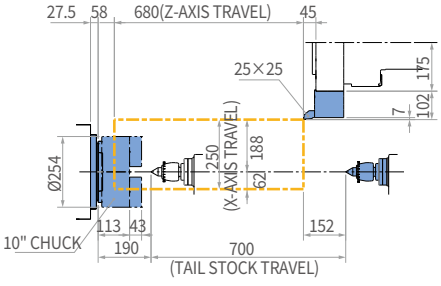

STRAIGHT MILLING HOLDER

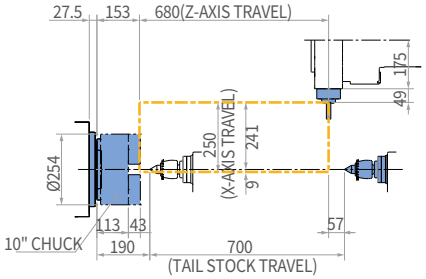

ANGULAR MILLING HOLDER (MAIN)

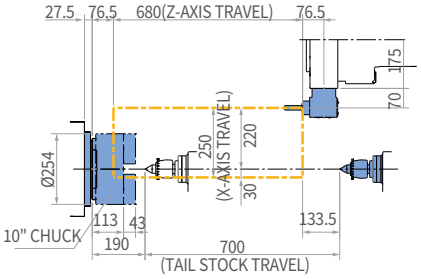

Lynx 2600Y_16 station

OD HOLDER

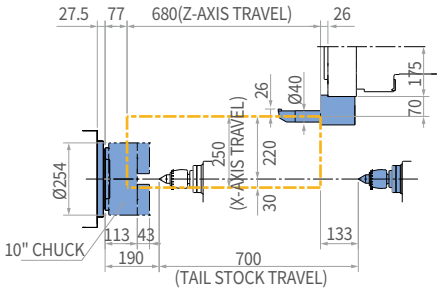

FACE HOLDER

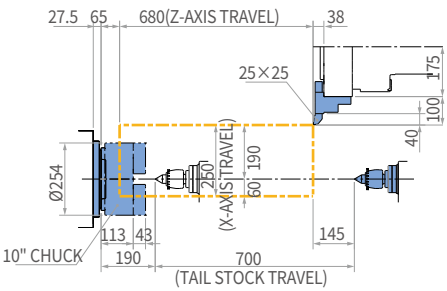

ANGULAR MILLING HOLDER (MAIN)

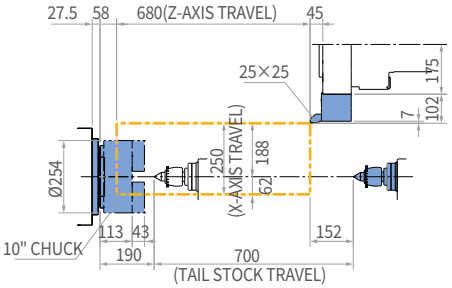

ID HOLDER

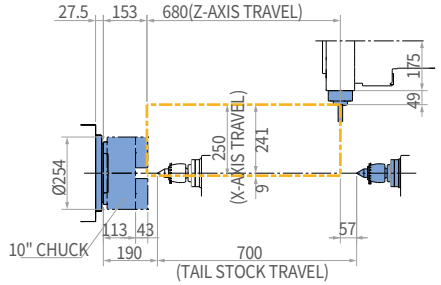

STRAIGHT MILLING HOLDER

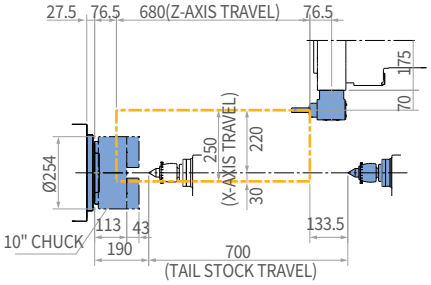

WORKING RANGE

Lynx 2600Y_ 24st. Indexing

Unit : mm(inch)

ID HOLDER

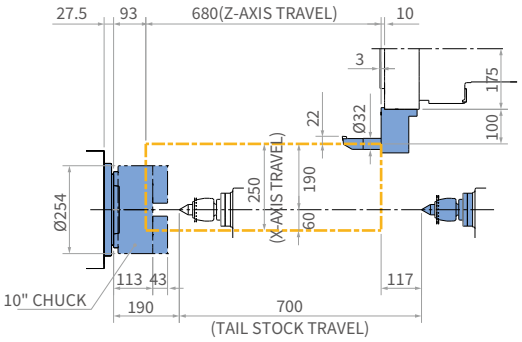

OD HOLDER

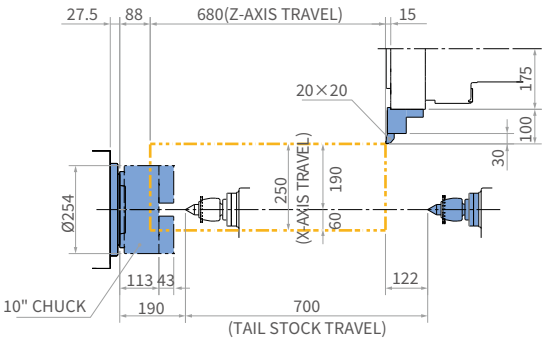

FACE HOLDER

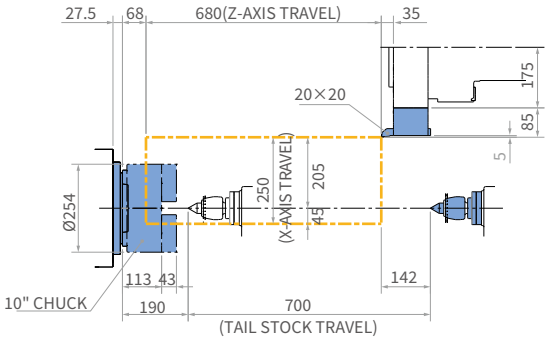

DOUBLE OD-F HOLDER

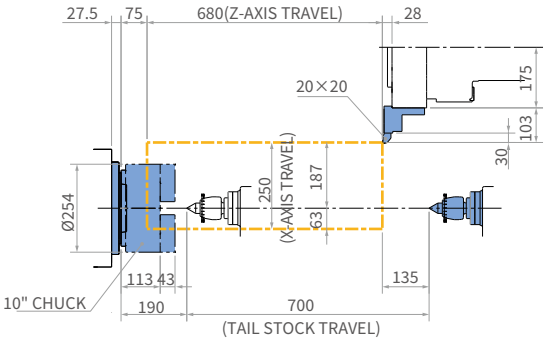

TRIPLE ID HOLDER

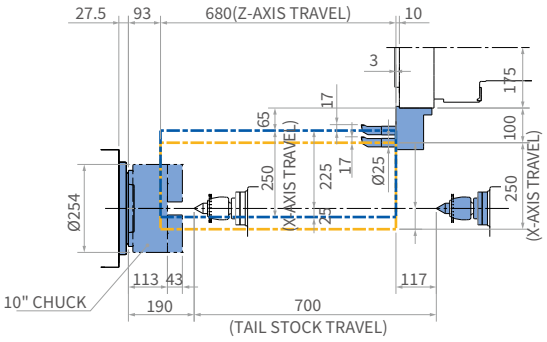

STRAIGHT MILLING HOLDER

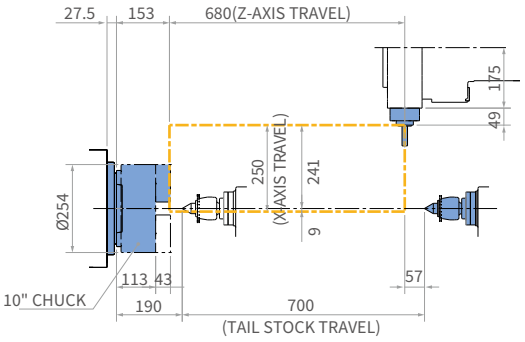

ANGULAR MILLING HOLDER (MAIN)

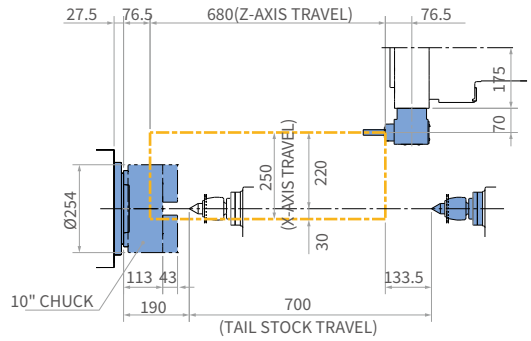

WORKING RANGE

Lynx 2600SY_ 12 station

Unit : mm(inch)

ID HOLDER

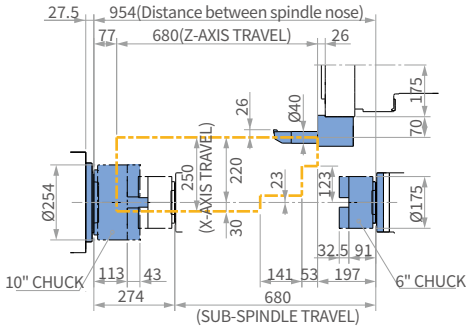

OD HOLDER

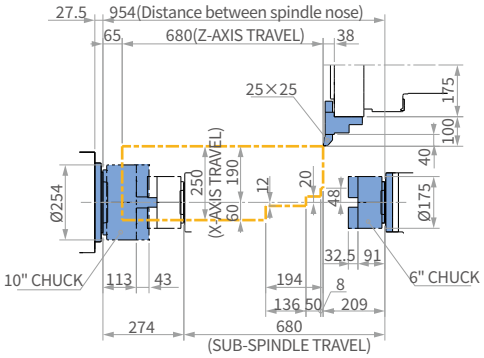

FACE HOLDER

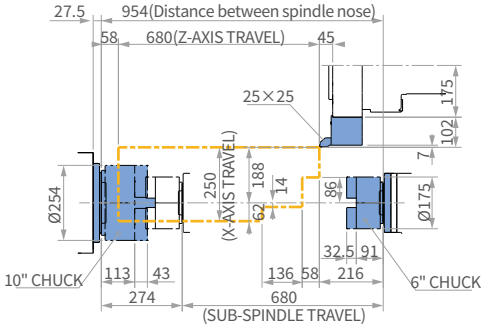

DOUBLE OD-B HOLDER

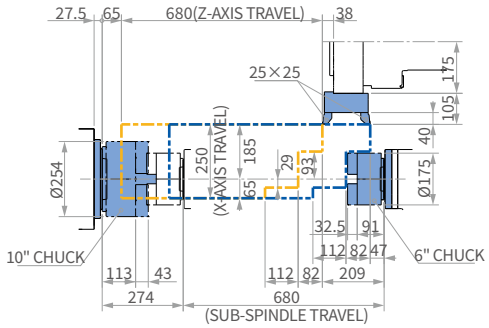

DOUBLE ID HOLDER

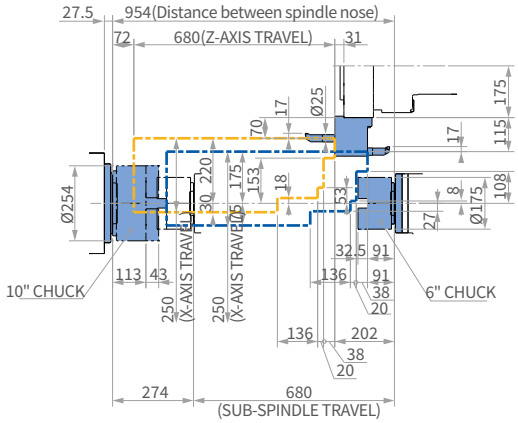

STRAIGHT MILLING HOLDER

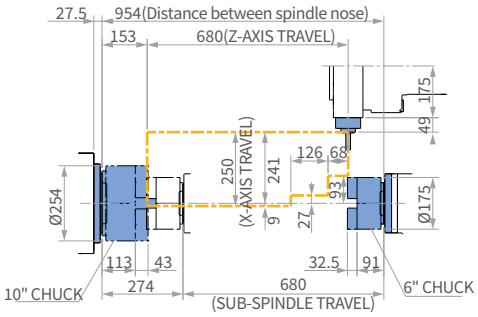

ANGULAR MILLING HOLDER (MAIN)

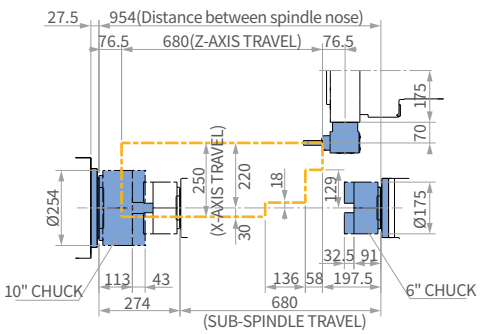

ANGULAR MILLING HOLDER (SUB)

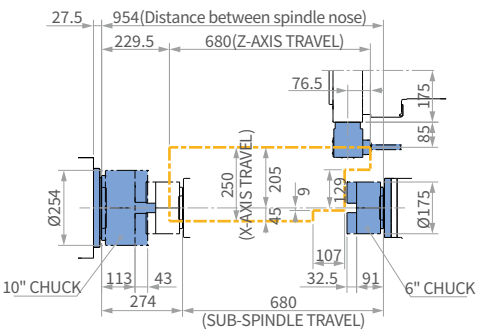

WORKING RANGE

Lynx 2600SY_ 16 station

Unit : mm(inch)

ID HOLDER

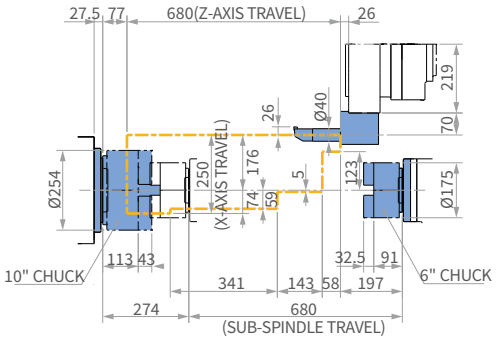

OD HOLDER

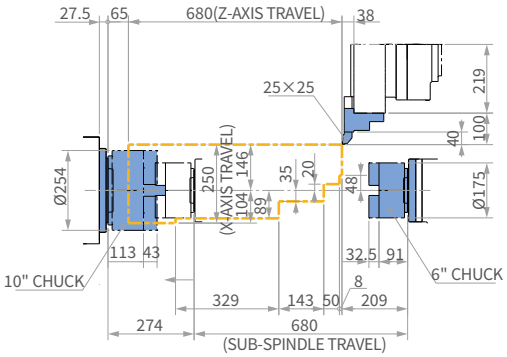

FACE HOLDER

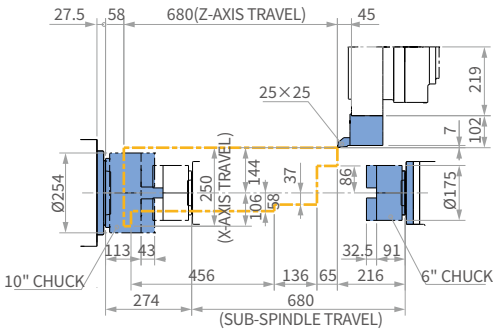

DOUBLE OD-B HOLDER

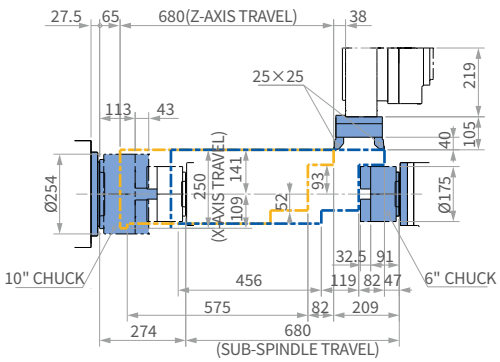

DOUBLE ID HOLDER

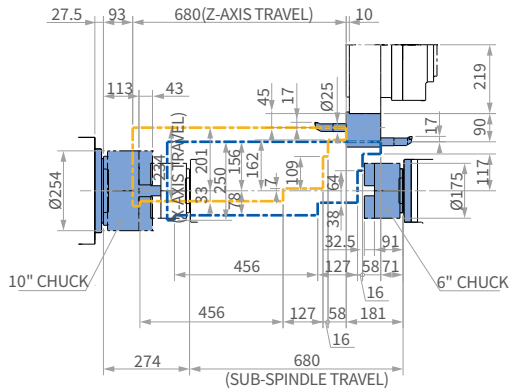

STRAIGHT MILLING HOLDER

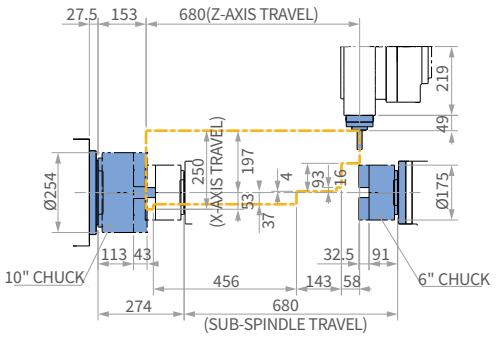

ANGULAR MILLING HOLDER (MAIN)

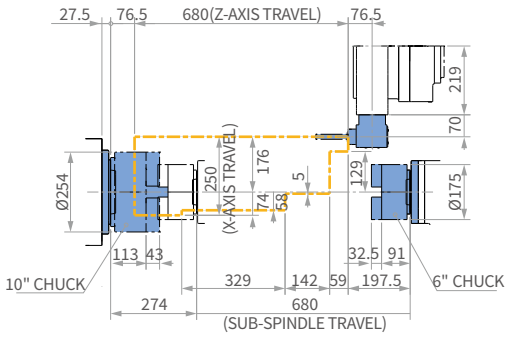

ANGULAR MILLING HOLDER (SUB)

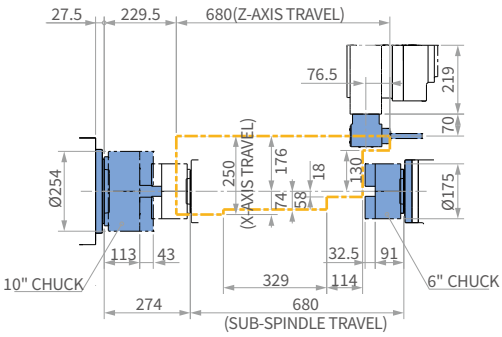

WORKING RANGE

Lynx 2600SY_ 24st. Indexing

Unit : mm(inch)

ID HOLDER

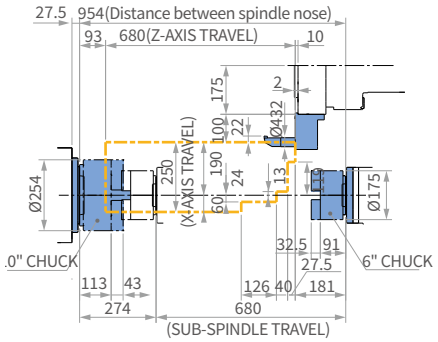

OD HOLDER

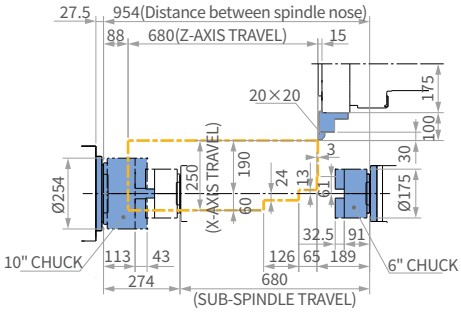

DOUBLE OD-F HOLDER

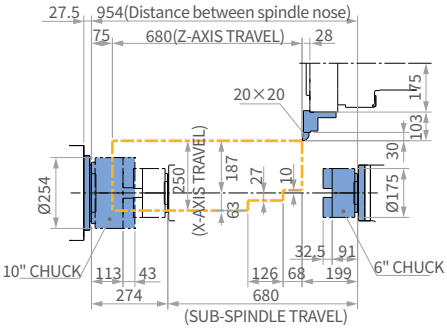

DOUBLE OD-R HOLDER

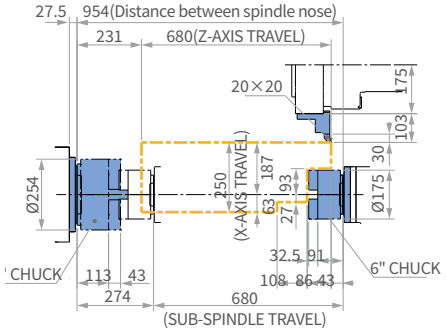

TRIPLE ID HOLDER

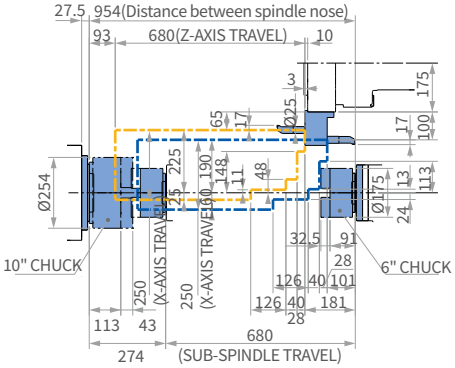

DOUBLE OD-B HOLDER

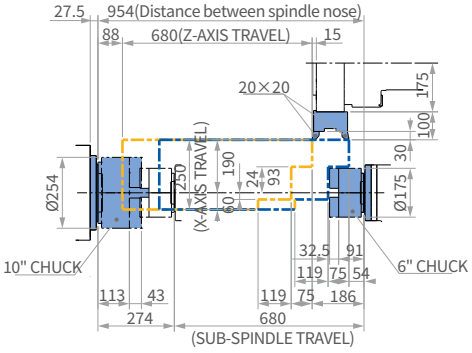

STRAIGHT MILLING HOLDER

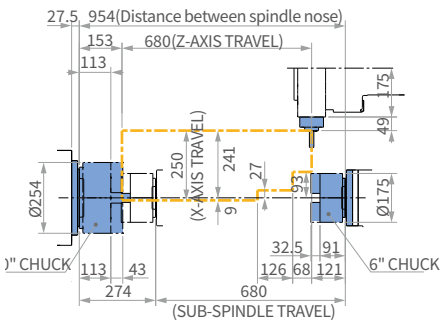

ANGULAR MILLING HOLDER (MAIN)

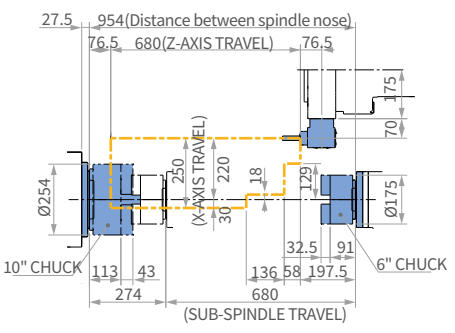

ANGULAR MILLING HOLDER (SUB)

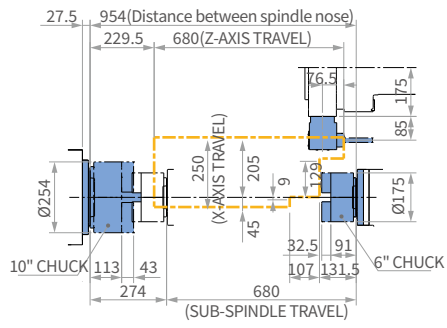

MACHINE SPECIFICATIONS

Description			Unit	Lynx 2100LYA	Lynx 2100LYB	Lynx 2100LSYA	Lynx 2100LSYB	Lynx 2600Y	Lynx 2600SY
Capacity	Swing over bed		mm (inch)	600 (23.6)				630 (24.8)	
	Swing over saddle		mm (inch)	400 (15.7)				460 (18.1)	
	Recom. Turning diameter		mm (inch)	170 (6.7)	210 (8.3)	170 (6.7)	210 (8.3)	255 (10.0)	
	Max. Turning diameter		mm (inch)	300 (11.8)				380 (15.0)	
	Max. Turning length		mm (inch)	510 (20.1)				610 (24.0)	
	Chuck size		inch	6 {8}*	8 {10}*	6 {8}*	8 {10}*	10 {12}*	
	Bar working diameter		mm (inch)	51 (2.0)	67 (2.6)	50 (2.0)	67 (2.6)	81 (3.2)	
Travels	Travel distance	X-axis	mm (inch)	205 (8.1)				250 (9.8)	
		Y-axis	mm (inch)	105 (±52.5) (4.1 (±2.1))				105 (±52.5) (4.1 (±2.1))	
		Z-axis	mm (inch)	560 (22.0)				680 (26.8)	
Feedrates	Rapid Traverse Rate	X-axis	m/min (ipm)	30 (1181.1)				30 (1181.1)	
		Y-axis	m/min (ipm)	10 (393.7)				10 (393.7)	
		Z-axis	m/min (ipm)	36 (1417.3)				30 (1181.1)	
Spindle	Max. Spindle speed		r/min	6000	4500	6000	4500	3500	
	Main spindle motor power (15min/Con.)(FANUC)		kW (Hp)	15/11/11 (20.1/14.8/14.8) (S3 25%/S3 40%/S1 Cont.)				18.5/15/15 (24.8/20.1/20.1) (S6 25%/S6 40%/Cont.)	
	Main spindle motor power (S6-60%/ Cont.) (SIEMENS)		kW (Hp)	12.6/10.5 (16.9/14.1) (S6 60%/Cont.)				22.2/22.2/18.5 (29.8/29.8/24.8) (S6 40%/S6 60%/S1 Cont.)	
	Max. Spindle Torque for Turning (FANUC)		N·m (ft-lbs)	127 (93.7)	169 (124.7)	127 (93.7)	169 (124.7)	403 (297.4)	
	Max. Spindle Torque for Turning (SIEMENS)		N·m (ft-lbs)	100.8 (74.4)	134.4 (99.2)	100.8 (74.4)	134.4 (99.2)	402 (296.7)	
	Spindle nose		ASA	A2-5	A2-6	A2-5	A2-6	A2-8	
	Spindle bearing diameter (Front)		mm (inch)	90 (3.5)	110 (4.3)	90 (3.5)	110 (4.3)	130 (5.1)	
	Spindle through hole diameter		mm (inch)	61 (2.4)	76 (3.0)	61 (2.4)	76 (3.0)	91 (3.6)	
	Min. spindle Indexing angle (C-axis)		deg	0.001					
Turret	No. of tool stations		ea	12 {24positin index}* {16}*					
	OD tool size		mm (inch)	20 x 20 (0.75 x 0.75)				25 x 25 (1.0 x 1.0)	
	Max. boring bar size		mm (inch)	Ø32 (Ø1.3)				Ø40 (Ø1.6)	
	Turret Indexing time (1 station swivel)		sec	0.11				0.15	
	Max. Rotary tool speed		r/min	6000 {10000}*				6000	
	Rotary tool motor power (FANUC)		kW (Hp)	3.7 (5.0)				5.5 (7.4)	
	Rotary tool motor power (SIEMENS)		kW (Hp)	4.9 (6.6)				6.2 (8.3)	
Tailstock	Tailstock travel		mm (inch)	580 (22.8)		-		700 (27.6)	-
	Quill bore taper		MT	MT#4		-		MT#4	-
Sub spindle	Chuck size		inch	-		5		-	6
	Max. Spindle speed		r/min	-		6000		-	4500
	Main spindle motor power (FANUC)		kW (Hp)	-		5.5/5.5/3.7 (7.4/7.4/5.0) (S3 25%/S3 60%/S1 Cont.)		-	7.5/5.5/5.5 (10.1/7.4/7.4) (S6 25%/S6 40%/S1 Cont.)
	Main spindle motor power (SIEMENS)		kW (Hp)	-		7.0/7.0 (9.4/9.4) (S6 60%/S1 Cont.)		-	8.4/8.4/7 (11.3/11.3/9.4) (S6 40%/S6 60%/S1 Cont.)
	Max. Spindle Torque for Turning (FANUC)		N·m (ft-lbs)	-		46 (33.9)		-	84 (62.0)
	Max. Spindle Torque for Turning (SIEMENS)		N·m (ft-lbs)	-		50 (36.9)		-	84 (62.0)
	Spindle nose		-	-		Flat Ø110		-	A2-5
	Spindle bearing diameter (Front)		mm (inch)	-		75 (3.0)		-	90 (3.5)
	Spindle through hole diameter		mm (inch)	-		43 (1.7)		-	61 (2.4)
	Min. spindle Indexing angle (C-axis)		deg	-		0.001		-	0.001
Power source	Electric power supply (FANUC / SIEMENS)		kVA	27.8/24.8		33.66/32.58		28.2/35.48	34.24/43.26
Machine Dimensions	Length		mm (inch)	2880 (113.4)				3425 (134.8)	
	Width		mm (inch)	1711 (67.4)				1920 (75.6)	
	Height		mm (inch)	1921 (75.6)				2095 (82.5)	
	Weight		kg (lb)	3850 (8487.7)	3900 (8597.9)	4150 (9149.0)	4200 (9259.3)	5750 (12676.4)	6000 (13227.5)
CNC	NC system			DN Solutions Fanuc i Plus, SIEMENS S828D					

*{} : option

RESPONDING TO CUSTOMERS **ANYTIME, ANYWHERE**

DN SOLUTIONS GLOBAL NETWORK

66 COUNTRIES | **140** + SALES NETWORKS | **3** FACTORIES | **6** REGIONAL HQS



CUSTOMER SUPPORT AND SERVICES

WE'RE THERE FOR YOU WHENEVER YOU NEED US.

We help our customers operate at maximum efficiency by providing them with a range of tried, tested and trusted services - from pre-sales consultancy to post-sales support.



FIELD SERVICES

- On-site service
- Machine installation and testing
- Scheduled preventive maintenance
- Machine repair service

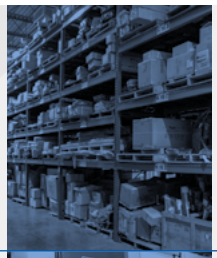

PARTS SUPPLY

- Supplying a wide range of original DN Solutions spare parts
- Parts repair service



TRAINING

- Programming, machine setup and operation
- Electrical and mechanical maintenance
- Applications engineering



TECHNICAL SUPPORT

- Supports machining methods and technology
- Responds to technical queries
- Provides technical consultancy

DN SOLUTIONS

dn-solutions.com

Head Office

19F, 10, Tongil-ro, Jung-gu, Seoul,
Republic of Korea, 04527

Tel: +82-2-6972-0370
Fax: +82-2-6972-0400

DN Solutions America

360 E State PKWY,
Schaumburg, IL. 60173,
United states

Tel: +1-315-265-7500

DN Solutions Europe

Emdener Strasse 24, D-41540
Dormagen, Germany

Tel: +49-2133-5067-100
Fax: +49-2133-5067-111

DN Solutions (India) Private Limited.

Plot No. 137, Devanahalli General
Industrial Area (KIADB), ACIL,
Kundana and Kasaba Area,
Devanahalli, Bengaluru Rural – 562110.
Karnataka, INDIA.

Email: info.india@dncompany.com

DN Solutions China

Room 101,201,301,
Building 39 Xinzhuan Highway
No.258 Songjiang District
China Shanghai (201612)

Tel: +86 21-5445-1155
Fax: +86 21-6405-1472

DN Solutions Vietnam

M.O.R.E building 2F, 40A-40B Ut
Tich Street, 04 Ward 04,
District Tan Binh District,
Ho Chi Minh City, Vietnam

Tel: +84 28-7304-0163

DN Solutions Mexico

Avenida Parque Bicentenario
#100 Nave M65L3-6,
Fraccionamiento San Isidro
Business Park,
Santa Rosa Jauregui,
Querétaro, México

E-mail: efrain.figueroa@
dncompany.com

Sales inquiry

sales@dncompany.com

** For more details, please contact DN Solutions.*
** Specifications and information contained within this catalogue may be changed without prior notice.*

ver. EN 260615 SU