DN SOLUTIONS

NEW COMPACT, SIMULTANEOUS 5-AXIS MACHINING CENTER
FOR HIGH-SPEED MACHINING

DVF 5000 2nd Generation

NEW DVF 5000 2nd Generation

DVF 5000 2nd generation provides significantly improved accuracy and higher productivity for simultaneous 5 axis machining compared to the previous model. The machine has stable bed structure/units and the top level cooling system for long-term base high accuracy condition. Its integrated automation, AWC(Auto Workpiece Changer) and Round Magazine provide "easy to make" automation solutions and enable to accelerate customer return on investment.

From small high precision medical parts to medium-sized automobile, aerospace and semiconductor parts, it is possible to cover various applications for both AL die-cast high-speed light cutting and titanium, inconel, Co-Cr difficult-to-cut machining with DVF's high rigidity, high speed spindle and rigid column/table structure.

CONTENTS

Product Overview

Basic Information

04 Basic Structure
05 Spindle Specifications
06 Magazine
07 Cooling & Thermal Compensation

Detailed Information

08 Standard / Optional Specifications
10 Peripheral Equipment
11 AWC Automation
12 AWC External Dimensions
15 CUFOS
17 Conveninet Operation
19 Power | Torque
20 External Dimensions
21 Working Range
22 Machine Specifications

Customer Support Service

23 Customer Support and Services
23 Global Network

FAST & PRECISE 5-AXIS EXCEEDS EXPECTATIONS

- 15000, 20000 r/min high speed spindle
- Tool change time(C-T-C) 3.8s, 28% faster than previous model
- Increased X/Y/Z-axis rapid traverse speed & acc./dec.
- Cooling functions as std. on spindle, motor/ LM guide/ball screw(X/Y/Z), C-axis table motor
- Integrated thermal compensation systems for spindle and structure

FURTHER INCREASED MACHINING CAPACITY

- Ø630mm dia. 2-axis tilting table, 26% increased compared to previous model
- Max. Ø600 x H500mm machining area, 32% increased compared to previous model
- Max. 400kg table load capacity with stable table support structure
- X/Y/Z axis travel distance 650/520/480mm, up to 20% increased compared to previous model

EASY ACCESS, EASIER OPERATION

- Easy setup of workpieces with 580mm distance between operator and table center
- Easy tool exchange by placing the tool magazine door on the front and applying a tool removal device (Auto Kicking Device)
- Improved chip disposal capability with enhanced coolant flood & flushing functions
- Grease lubrication system
- Compact integrated automation system(AWC)

BASIC STRUCTURE

Roller LM guideways on X/Y/Z axes and 0.001 deg. High accuracy B/C axis get higher accuracy and structural stability.

Table size

Ø630 x 450 mm
(ø24.8 inch x 17.7 inch)

Maximum workpiece size

Ø600 x 500 mm
(ø23.6 inch x 19.7 inch)

Maximum workpiece weight

400 kg
(881.8 lbs)

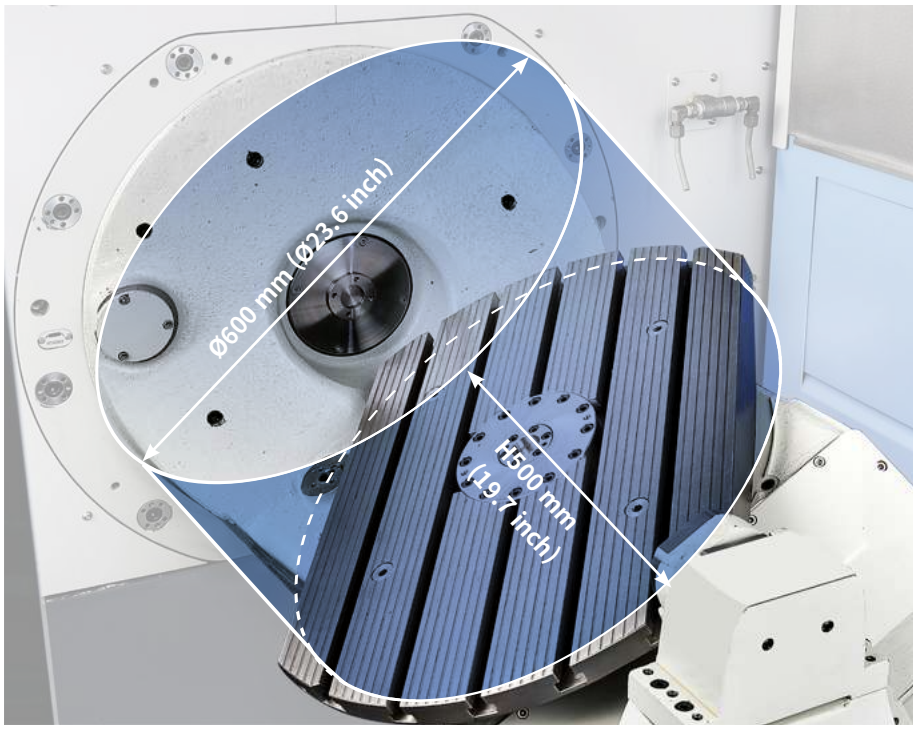

Travel distance

X/Y/Z

650 / **520** / **480** mm
(25.6/20.5/18.9 inch)

B/C

140(-30~+110) / **360** deg

Rapid traverse rate

X/Y/Z

42 / **42** / **42** m/min
(1653.5/1653.5/1653.5 ipm)

B/C

25 / **25** r/min

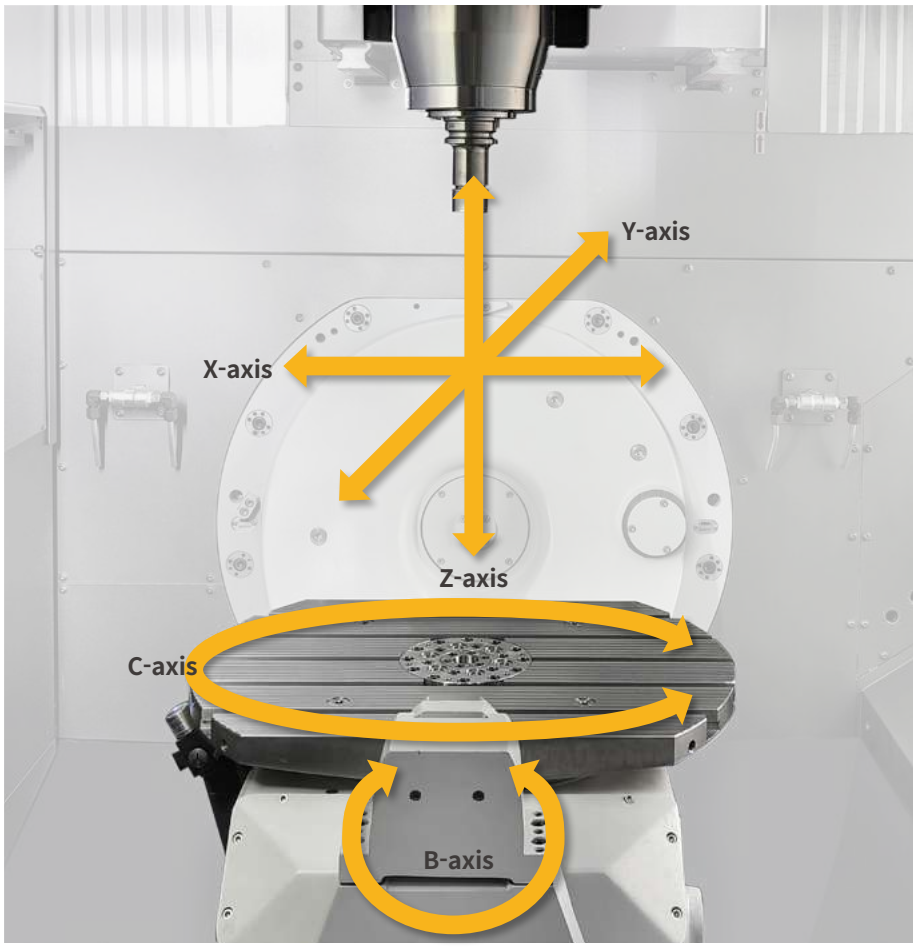

SPINDLE SPECIFICATIONS

Providing stable machining performance with a high-speed, direct-coupled or a built-in spindle.

- Oil cooling spindle thermal compensation as standard
- Tool clamp confirmation sensor
- FANUC, HEIDENHAIN, SIEMENS controls

15000 r/min, Direct-coupled

18.5 kW / **118** N·m
(24.8 Hp / 87.1 ft-lbs)
(FANUC)

17 kW /**108** N·m
(22.8 Hp / 79.7 ft-lbs)
(HEIDENHAIN)

16.5 kW / **79** N·m
(22.1 Hp / 58.3 ft-lbs)
(SIEMENS)

15000 r/min High Torque Built-in

30 kW / **230** N·m
(40.2 Hp / 169.7 ft-lbs)
(FANUC / HEIDENHAIN / SIEMENS)

20000 r/min, High Speed Built-in

37 kW / **221** N·m
(49.6 Hp / 163.1 ft-lbs)
(FANUC)

30 kW / **155** N·m
(40.2 Hp / 114.4 ft-lbs)
(HEIDENHAIN / SIEMENS)

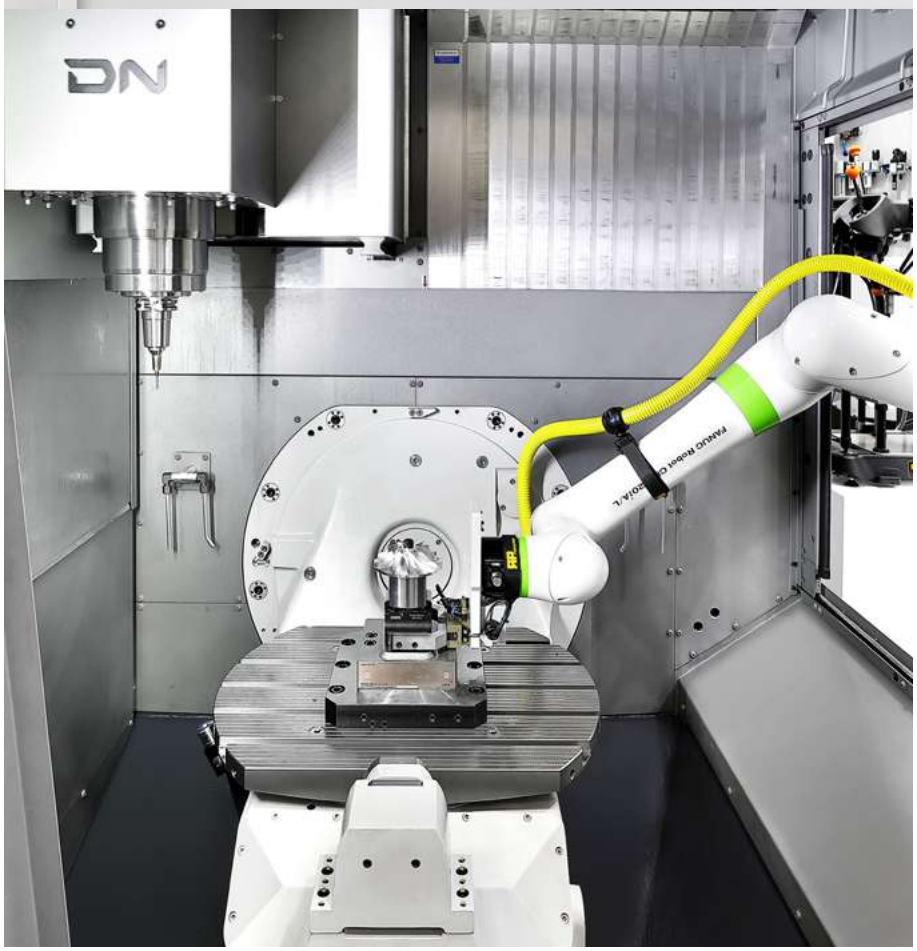

MAGAZINE SPECIFICATIONS

Servo tool magazine delivers high productivity and reliability.

Tool type

ISO #40

Tool capacity

Drum type

30 {40 OPTION}

Chain type

{60/120 OPTION}

Maximum tool diameter

Continuous

75 mm (3.0 inch)

W/O Adjacent tools

125 mm (4.9 inch)

Maximum tool length

300 mm (11.8 inch)

Maximum tool weight

8 kg (17.6 lb)

Tool-to-tool

T-T-T

1.3 sec

C-T-C

3.8 sec

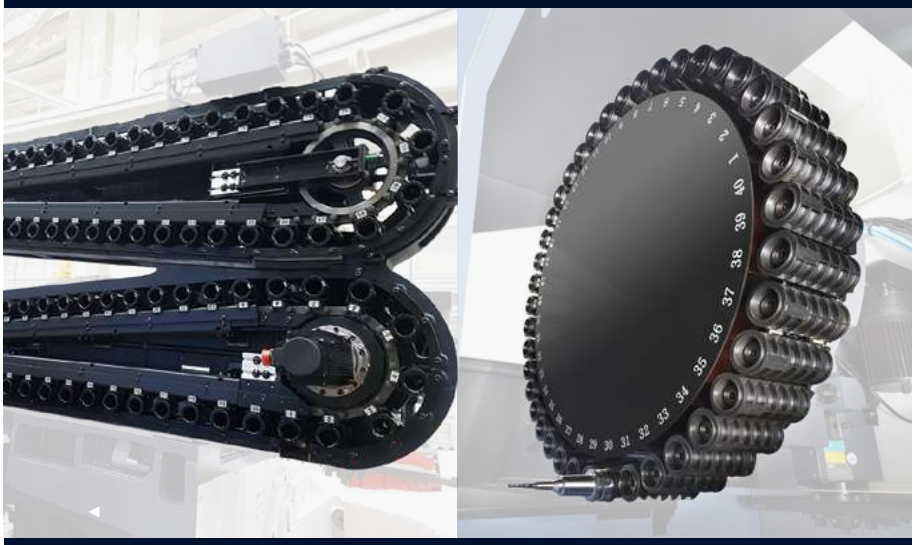

Tool magazine door at front side helps easy tooling setup and operation.

High-capacity tool Handling system for VMC with improved space efficiency and tool change time

Description			Round tool magazine
Available Model		-	DVF series
Max. Tool Diameter		mm	80(cont.), 125 (Adjacen Pots Empty)
Max. Tool Length		mm	300
Tool Storage Capacity		ea	204/252/300
Max. Tool Weight		kg	8
Max. Tool Moment		N·m	5.88
Max. Tool Searching Time		sec	26
Pull Out		ea	5
Waiting Pot		ea	4
Tool		-	Verticality
Structure		-	Round Type
Control		-	Built-in
Carrier Drlving Mechanism	U-Axis	-	Servo Motor & Rack / Pinion w / LMG
	V-Axis	-	Servo Motor & Ball Screw w / LMG
	R-Axis	-	Servo Motor & Gear
Dimension		mm	1875 x 2069

Round tool magazine

Features

- Optimized solution for high-capacity vertical tool storage and handling
- Enhanced tool change time through Multi-Waiting Pot Station with multiple next tool places
- Up to 5 tools can be taken out and brought in simultaneously
- Easy installation for local environment
- Large touch screen provided
- Servo motor applied to all axis
- Built-in controller

COOLING & THERMAL COMPENSATION CONCEPT TOACHIEVE HIGH ACCURACIES OVER LONG MACHINING RUN

X/Y/Z-axis Cooling (Guideways, Ball screw, Motor) & Cooled motor plate in C axis

❶ Cooled motor plate in X axis & ball screw shaft

❷ Cooled X axis linear guideways

❸ Cooled motor plate in Y axis & ball screw shaft

❹ Cooled Y axis linear guideways

❺ Cooled motor plate in Z axis & ball screw shaft

❻ Cooled Z axis linear guideways

❼ Cooled Spindle bearing & Motor plate

❽ Cooled motor plate in C axis

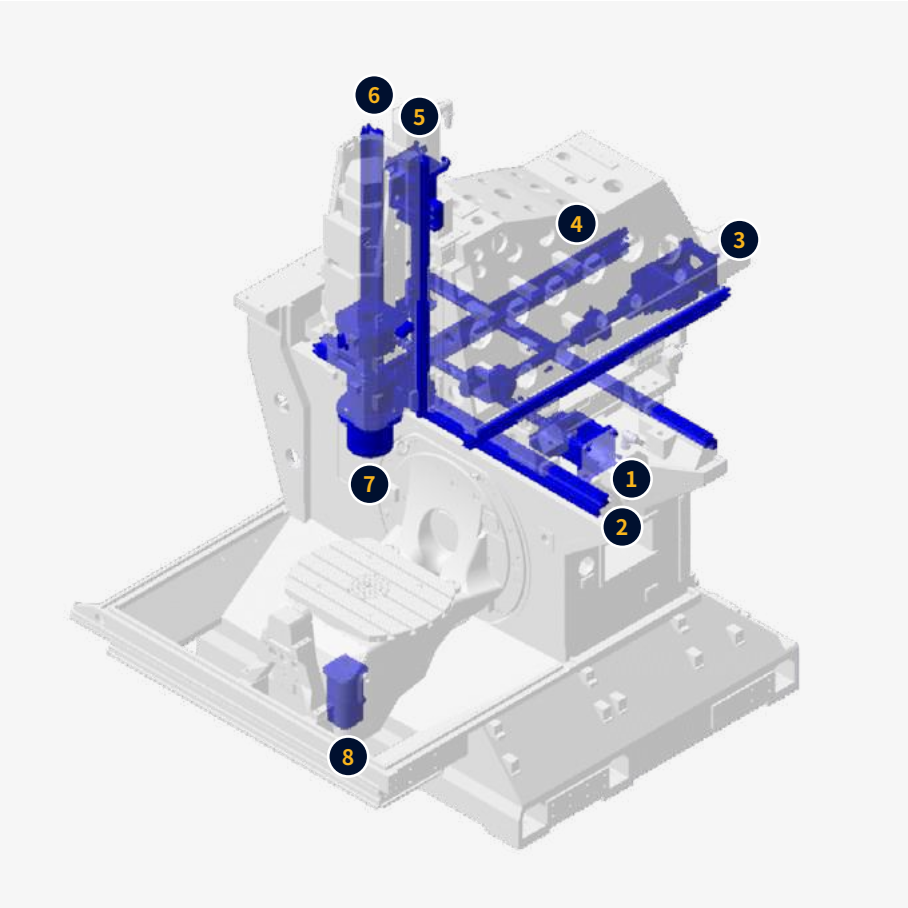

Thermal compensation function for Spindle and Structure as standard

- Real-time thermal displacement measuring and compensation through active thermal sensors
- 8 sensors are located

STANDARD | OPTIONAL SPECIFICATIONS

A range of options is available to suit individual requirements.

Description				DVF 5000 2nd
Spindle	12000 r/min(Direct-coupled)			X
	12000 r/min(Built-in)			X
	15000 r/min(Direct-coupled)			●
	15000 r/min(Built-in)			○
	18000 r/min			X
	20000 r/min			○
	10000 r/min			X
Magazine	Tool storage capacity		30 ea	●
			40 ea	○
			60 ea	○
			120 ea	○
	Multi-Level round	#40	175 ea	X
			204 ea	○
			252 ea	○
			300 ea	○
		#50	120 ea	X
			150 ea	X
			210 ea	X
			258 ea	X
Tool type(shank)	BIG-PLUS BT40			●
	BIG-PLUS BT50			X
	CAT/DIN40/HSK63			○
	CAT/DIN50/HSK A100			X
	HSK T63			X
	HSK T100			X
Coolant	FLOOD&FLUSHING		1.5Kw, 0.2Mpa	●
			2.5kW,0.2MPa	X
	TSC		2.9kW, 2.0Mpa, Cyclone filter	○
			2.9kW,3.0MPa,Cyclone filter	○
			7.5kW,7.0MPa,Cyclone filter	○
	OIL SKIMMER			○
	Coolant level switch			○
	Coolant chiller			○
Chip disposal	Chip pan			●
	Chip conveyor		Hinge+scraper belt type/Left side	○
			Hinge+scraper belt type/Lear side	X
			Scraper Drum filter type/Left side	○
			Scraper Drum filter type/Lear side	X
			Hinged Drum filter type/Lear side	X
			CCS II / Scraper Drum	X
			CCS II / Hinge Drum	X
	Chip bucket		folklift type, 300L	○
			Rotation type, 300L	○
	Air blower			○
	Air gun			○
	Coolant gun			○
	Paper filter			○
	Mist collector		Water soluble	○
			None water soluble	○
Rotary table	Air clamping		B-axis/C-axis	-
	Rotary joint		Hyd. Fixture line thru table center(Max. 4 port)	X
			Hyd. Fixture line thru table center(Max. 6 port)	○
	Fixture interface		2AB	X
			2AB+GAP SENSING(5PORT)	○
Accuracy	Structure Smart Thermal Control		Spindle	●
			Structure	●
	Linear scale		X/Y/Z axis	○
	Rotary encoder		A/B/C axis	●
Measurment	IKC-READY		S/W ONLY	●
			RENISHAW (RMI-QE)+S/W	○
			HEIDENHAIN(SE660)+S/W	○
			BLUM(RC66)+S/W	○
	Auto tool length measurement		NONE	○
		Touch type	RTS RENISHAW	○
			TT460 HEIDENHAIN	○
			ZX SPEED BLUM	○
		Laser type	NC4F RENISHAW	○
			LC50 BLUM	○
		HYBRID	NC4F HYBRID RENISHAW	X
			LC52 BLUM	X
	Auto workpiece measurement		NONE	●
			RMP60 RENISHAW	○
			RMP600 RENISHAW	○
			TS460 HEIDENHAIN	○
			TC60 BLUM	○
	DATUM BALL FOR IKC		NONE	●
			DATUM BALL D25	○
	MASTER TOOL		NONE	●
			MASTER TOOL	○
	SINGLE LEVEL AWC		4/6/8/12 PALLETS	○
	MULTI LEVEL AWC		24/28/32/40 PALLETS	○
Others	APC		2/4 PALLETS	X
	RPS		7/14/21 PALLETS	X
			6/12/18 PALLETS	X
	LPS			X
	AUTO DOOR		With safety edge	○
			With safety edge	○
	LED work light			○
	Signal tower			○
	Electric cabinet cooling		Fan cooler	●(FANUC)
			A/C(Air Conditioner)	○(FANUC)/●(HEIDNEHAIN,SIEMENS)
	EZ WORK			●
	EZ GUIDE 1			○
	Automatic power off			○
	Tool load monitornig			○
Option	BK9			○
	SPIN WINDOW			○
	TSC			○

※ Please contact your DN Solutions representative for detailed machine information.
※ When using a semi-synthetic type or synthetic type, contact our sales representative or service center in advance.

● *Standard* ○ *Optional* *X N/A*

Fire Safety Precautions | There is a high risk of fire when using non-water-soluble cutting fluids, processing flammable materials, neglecting the controlled and careful use of coolants and modifying the machine without the consent of the manufacturer. Always check the SAFETY GUIDELINES carefully before using the machine.

PERIPHERAL EQUIPMENT

Automatic Workpiece Measurement

Touch probe : RMP60(Renishaw), TC-60(Blum)

Automatic Tool Measurement

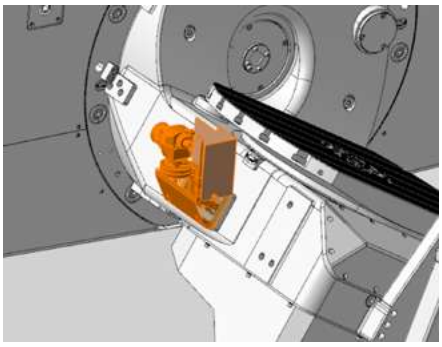

Renishaw(RTS)

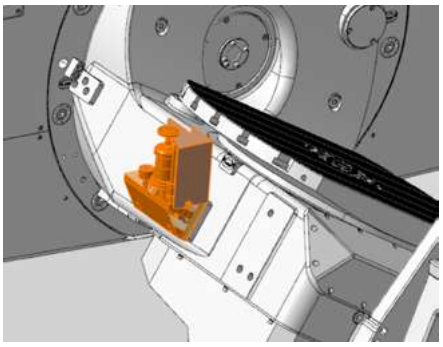

Heidenhain(TT460)

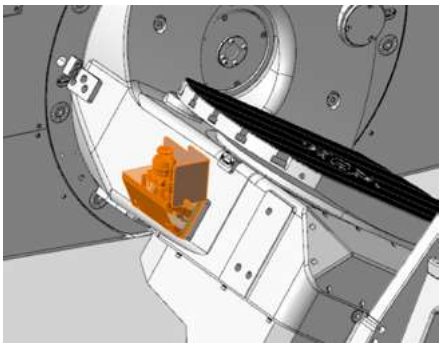

Blum(ZX Speed)

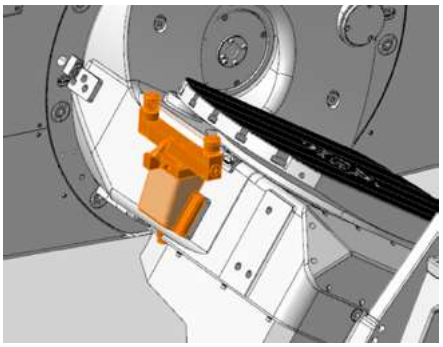

Renishaw(NC4F)

Touch type

RENISHAW
RTS

HEIDENHAIN
TT460

BLUM
ZX SPEED

Laser type

RENISHAW
NC4F

BLUM
LC50

Intelligent Kinematic Compensation for 5-axis

For high-accuracy 5-axis machining, the Intelligent Kinematic Compensation function is recommended. This function minimizes errors in complex 5-axis machining applications by maintaining the tool point in the correct position relative to the workpiece.

In order to use this function, the following optional items are required :

SOFTWARE

FANUC NC : IKC

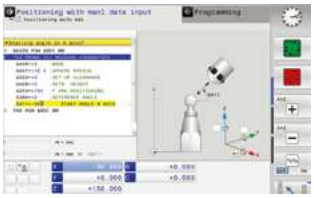

HEIDENHAIN NC ; IKC

RECEIVER Recommended Option

TOUCH PROBE Recommended Option

DATUM BALL Recommended Option

AUTO TOOL MEASUREMENT Recommended Option

MASTER TOOL Recommended Option

AWC

A compact loading/unloading automation capable of mounting up to 40 workpieces.

AWC

A compact automation system providing fast, reliable and high productivity workpiece change capabilities.

Multi-AWC

Automation solution capable of mounting up to 40 workpieces.

Description	Pallet size	No. of pallets	Max. workpiece dia. x height	Max. workpiece weight
AWC	250x250 mm (9.8x9.8 inch)	12ea	∅300x350 mm (11.8x13.8 inch)	130 kg (286.6 lb)
	350x350 mm (13.8x13.8 inch)	8ea	∅400x350 mm (15.7x13.8 inch)	300 kg (661.4 lb)
	400x400mm (15.7x15.7 inch)	6ea	∅450x350 mm (17.7x13.8 inch)	300 kg (661.4 lb)
	500x500mm (19.7x19.7 inch)	4ea	∅550x350 mm (21.7x13.8 inch)	300 kg (661.4 lb)
Multi-AWC	Ø160 mm (6.3 inch) (HSK A100 Tool Type)	40ea	Ø350x315mm (13.8 x 12.4 inch)	80 kg (176.4 lb)
	250x250mm (9.8x9.8 inch)	40ea	∅300x350 mm (11.8x13.8 inch)	130 kg (286.6 lb)
	350x350mm (13.8x13.8 inch)	32ea	∅400x350 mm (15.7x13.8 inch)	300 kg (661.4 lb)
	400x400mm (15.7x15.7 inch)	28ea	∅450x350 mm (17.7x13.8 inch)	300 kg (661.4 lb)
	500x500mm (19.7x19.7 inch)	24ea	∅550x350 mm (21.7x13.8 inch)	300 kg (661.4 lb)

Pallet storage-table configuration

unit : mm (inch)

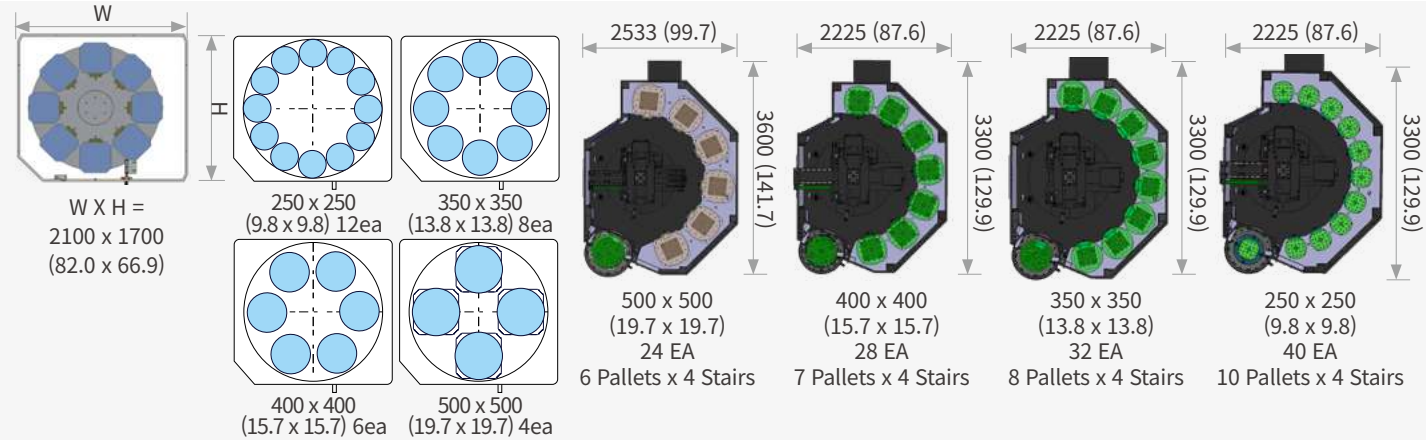

S-AWC DIMENSIONS

Units : mm (inch)

TOP

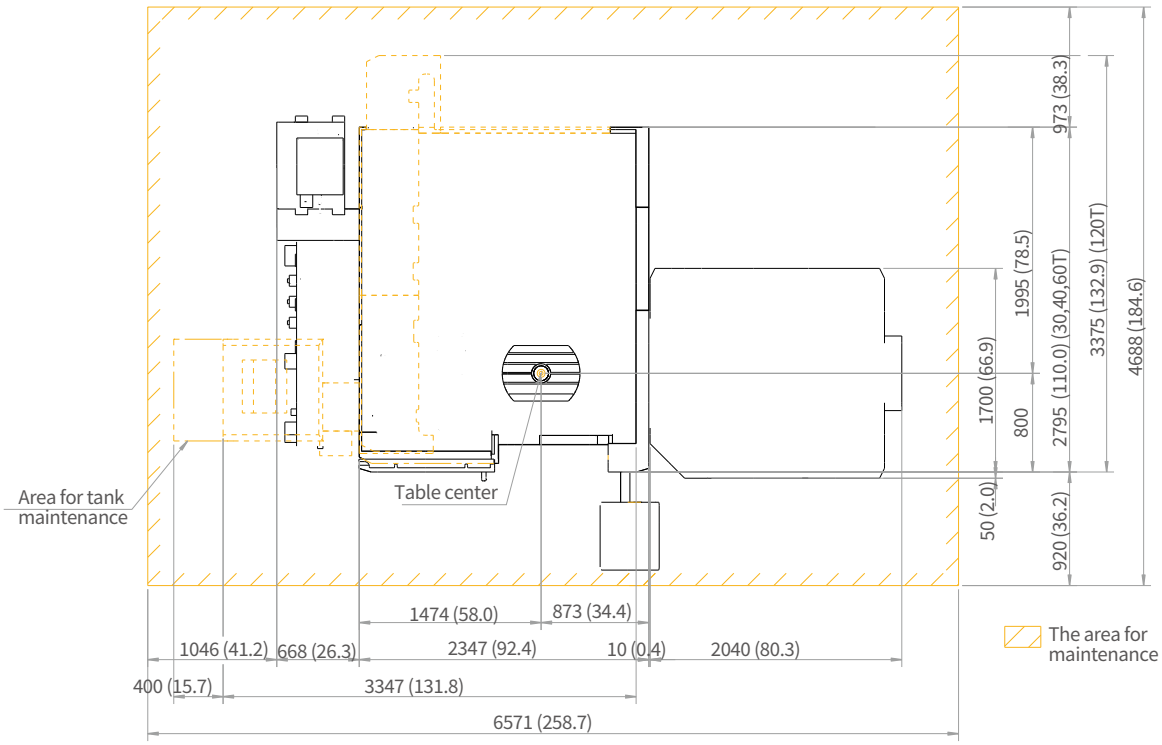

FRONT

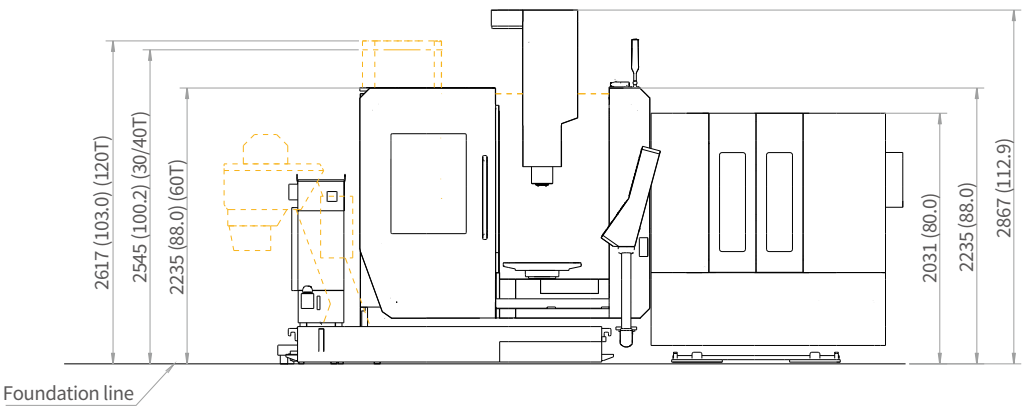

**Some peripheral equipment can be placed in other areas.*

M-AWC DIMENSIONS

24P

Units : mm (inch)

TOP

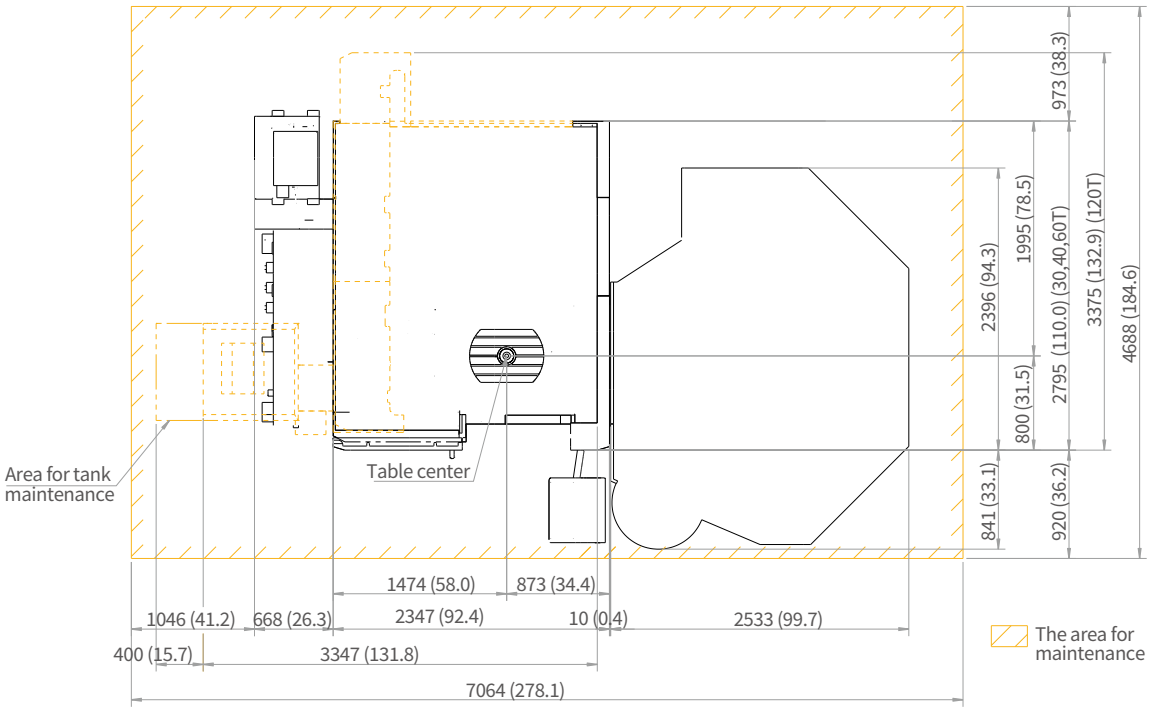

FRONT

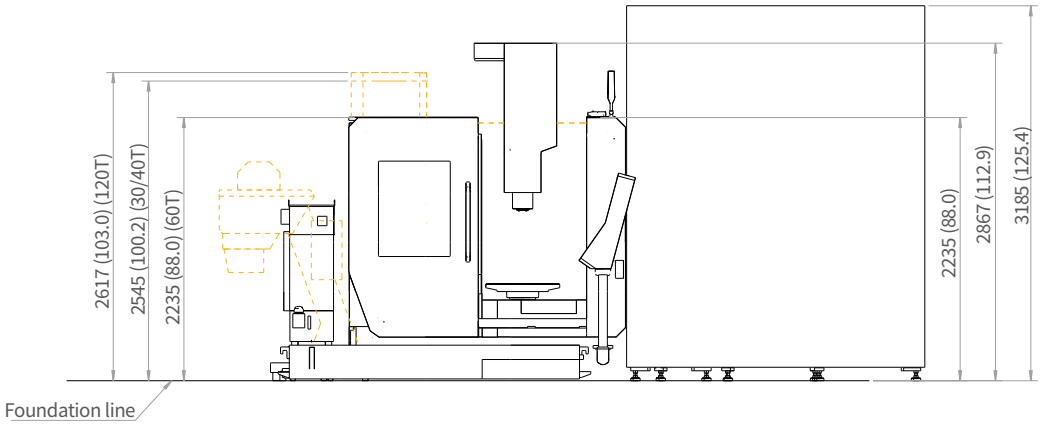

*Some peripheral equipment can be placed in other areas.

M-AWC DIMENSIONS

28 / 32 / 40P

Units : mm (inch)

TOP

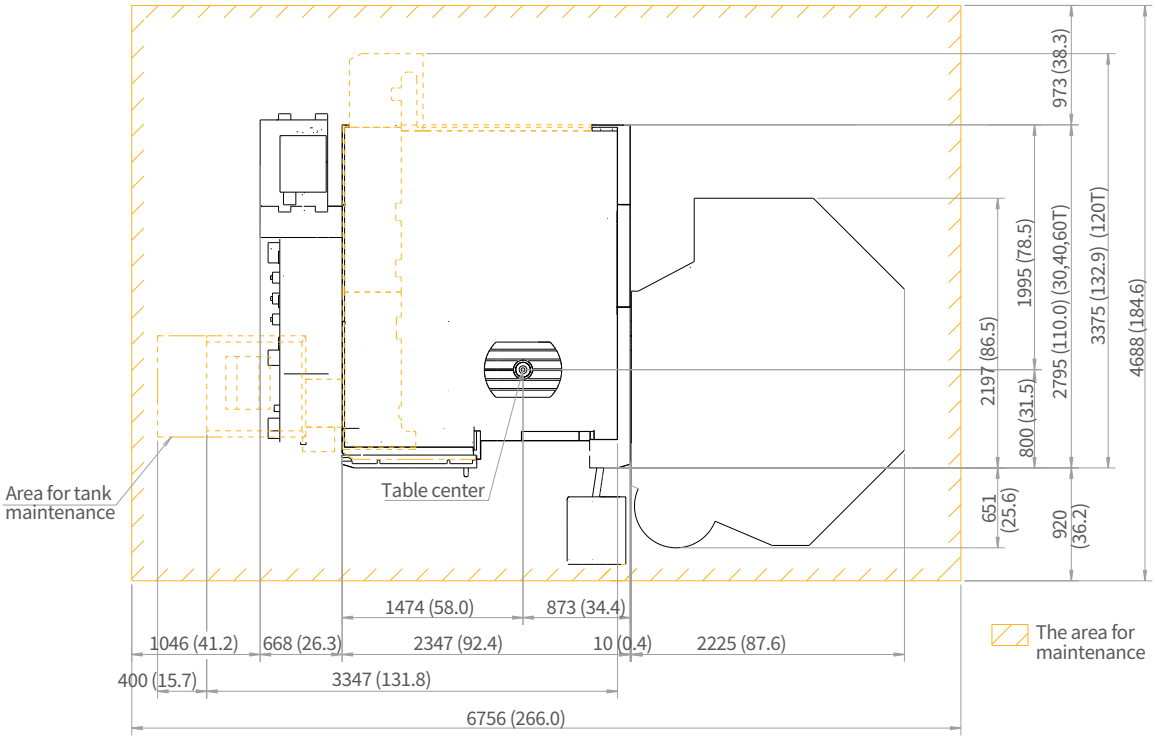

FRONT

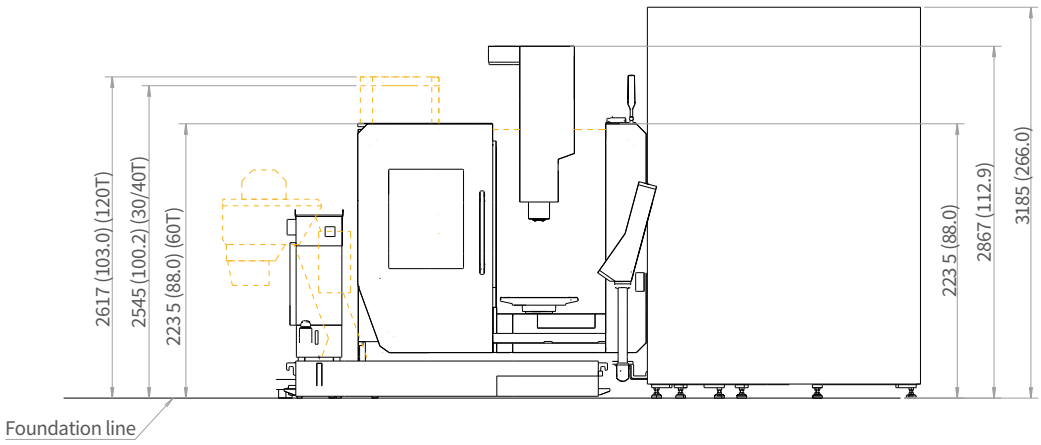

**Some peripheral equipment can be placed in other areas.*

CUSTOMIZED USER-FRIENDLY FLEXIBLE OPERATION SOLUTIONS

CUFOS is a PC based control system created by DN Solutions. equipped with intuitive user-friendly functions such as a smart phone screen and easy customization, CUFOS helps to improve operational efficiency and performance for the user.

FEATURES

19 inch TOUCHSCREEN
- Program memory : 40GB
- App-based Interface like smart phone, tablet PC

EASY PROGRAMMING
- Sketch cycle : Gear skiving, Gear hobbing, Polygon turning (continuously being added…)
- SSD data server : Program file sharing/managing (CF card/USB/External PC)

EASY SET-UP/OPERATION
- Tool management
- CPS(collision protection system)
- Manual viewer
- File manager & PDF viewer

EASY MAINTENANCE
- Status monitor
- Alarm guidance
- Maintenance manager

CUFOS

CUFOS INTERFACE

User-friendly screen controls

CUFOS, the PC-based control created by DN Solutions, is an integrated system solution using an intuitive 19-inch touchscreen. The system provides a convenient operator interface, a high level of customization and many useful high technology apps.

Supports various apps in three fields—setup, machining and utility

It provides easy configuration by allowing users to add and edit functions on the home screen according to job requirements.

Intuitive operation via touch screen

Simple customization is available for specific work environments

CUFOS Open CNC

CUFOS operation for enhanced productivity

The CUFOS operating system is based upon the integration of all aspects of the manufacturing process, including setting, machining and maintenance. It consolidates up-to-date software technology created by DN Solutions, to improve overall efficiency and productivity. Using the system's modular construction, each function can be easy integrated with external PC software systems and applications, such as CAM and Tool Data systems.

CUFOS

programming
set up
tool data
machining
maintenance

PC software

Applications

CPS (Collision Protection System)

A function to prevent real time collision in Auto/Manual mode between the tool and equipment / machine elements inside the working area.

Use the Setup Manager with the CPS app to build up the machine model, and add tool, workpiece and workholding equipment details.

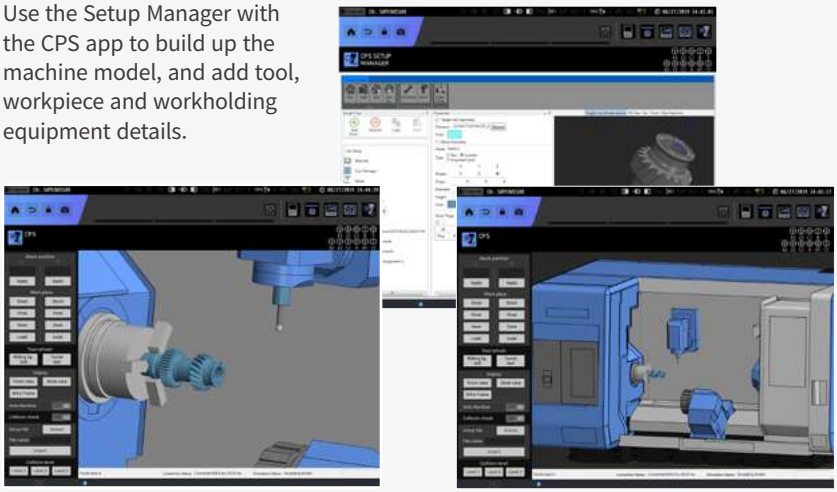

CONVENIENT OPERATION

SIEMENS SINUMERIK ONE

Even Faster & Easier processing + 21.5" screen

All programming, set-up, actual machining and verification process are getting easier and faster. Especially, intuitive conversational programming guidance with 3D UI(user interface) on 21.5" large touch screen is helpful for unskilled engineers.

- 21.5 inch touch screen
- 50% improvement in processing speed (compared to S840D)
- Graphic programming
- PLC-based flexible automation

Conversational convenient function

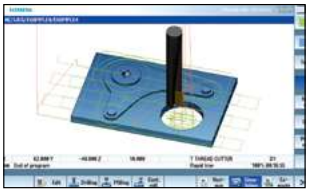

Simulation and machining contour monitoring

Smart function

Side screen widget

5-axis kinematic measuring cycles

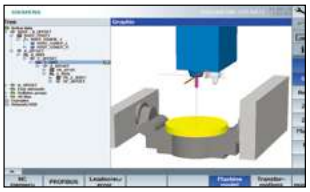

3D collision avoidance and collision avoidance ECO

Shop mill part programming

NUMERIC CONTROL SPECIFICATIONS

SIEMENS

	Item	Specifications	S-ONE
Controlled axis	Controlled axes		5 axes (X,Y,Z,C,B)
	Simultaneously controlled axes		5 axes
Data input/output	Memory card input/output	(Local drive)	●
	USB memory input/output		●
Interface function	Ethernet	(X130)	●
Operation	Execution from Extenal Storage(EES)		○
	On network drive	(without EES option, Extcall)	●
	On USB storage medium, e.g. memory stick	(without EES option, Extcall)	●
Program input	Workpiece coordinate system	G54 - G57	●
	Addition of workpiece coordinate system	G505 - G599	●
Interpolation & Feed function	Top surface		○
	Look ahead number of block		1000
	monitoring for max. tool speed/ acceleration		○
	Top Surface		○
	Top Speed Plus		○
Programming & Editing function	3D simulation, finished part		●
	Simultaneous recording		●
	Measure kinematics		●
	DXF Reader for PC integrated in SINUMERIK Operate		○
Operation Guidance Function	ShopMill		●
	EZ Work		●
Setting and display	Operation via a VNC viewer		●
Network	MTConnect		✪
	OPCUA		○
Others	18.5" color display with touch screen		○
	21.5" color display with touch screen		●
	CNC user memory	10 MB	●
	Max. CNC user memory	28 MB	○
	Collision avoidance (machine, working area)		○
	Collision avoidance ECO (machine, working area)		●
	Evaluation of internal drive		○
	CNC user memory extend		○
	TOOL ID		○
	PMM		○

● *Standard* ○ *Optional* *X N/A* ✪ *Available*

CONVENIENT OPERATION

HEIDENHAIN TNC7

<TNC7>

Visualized, intuitive task support, customized UI

The TNC7 makes machining even easier, for everything from programming to program validation and from machine setup to actual machining. You intuitively operate highly complex applications directly on the touchscreen with various integrated solutions for standard tasks.

TNC7 NEW

- 24 inch touch screen
- 189GB Program memory
- Look-ahead 5000 blocks
- Touch Probe Cycles
  Graphical Programming

Conversational convenient function

Data are controlled in the folder structure; convenient communication via USB devices

KinematicOpt & KinematicComp (Touch probe cycle for automatic measurement) OPTION

Collision protection system OPTION

Graphic simulation

Various built-in pattern cyclesfor a wider scope of application (Software standard)

Enhanced collision protection function DCMv2 OPTION

Improved maintenance environment

Highly practical programming and setup based on touch operation

NUMERIC CONTROL SPECIFICATIONS

HEIDENHAIN

	Item	Specifications	TNC7
Controlled axis	Controlled axis		5 axes (X,Y,Z,C,B)
	Simultaneously controlled axis		5 axes
Interface function	Embedded ethernet		●
	USB interface (USB 2.0)		●
	HEIDENHAIN DNC		○
Feed function	Look-ahead	5000 blocks	●
	Adaptive Feed Control		○
Axis compensation	KinematicsOpt	Automatic measurement and optimization of machine kinematics	●
Collision monitoring	Dynamic collision monitoring (DCM)		○
	Dynamic Collision Monitoring v2		○
Network	MT Connect		✪
Others	Display unit	touch panel	24"
	Program memory for NC programs		189GB
	CAD Import		○
	Ext. Tool Management		○
	Active Chatter Control		○
	Model Aided Setup		○
	Opt. Contour Milling		○
	Process Monitoring		○

● Standard ○ Optional X N/A ✪ Available

POWER | TORQUE

FANUC

15000r/min Direct
Power 18.5/11 kW (24.8/14.8 Hp)
Torque 118 N·m (87.1 ft-lbs)

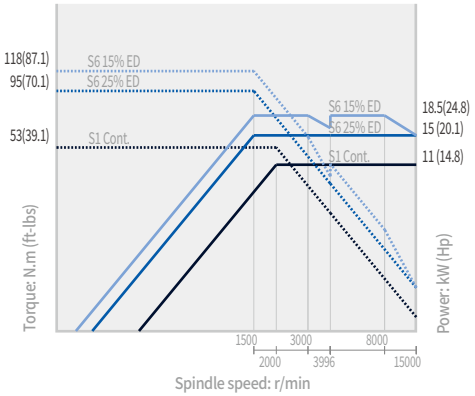

15000r/min Built in OPTION
Power 30/18.5 kW (40.2/24.8 Hp)
Torque 230 N·m (169.7 ft-lbs)

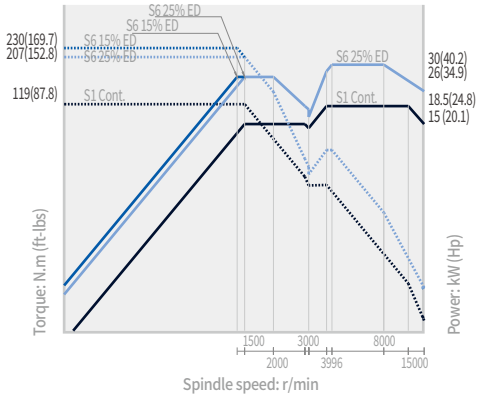

20000r/min Built in OPTION
Power 37/18.5 kW (49.6/24.8 Hp)
Torque 221 N·m (163.1 ft-lbs)

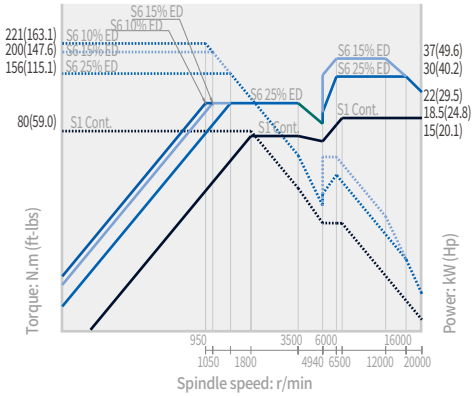

HEIDENHAIN

15000r/min Direct
Power 17/10 kW (22.8/13.4 Hp)
Torque 108 N·m (79.7 ft-lbs)

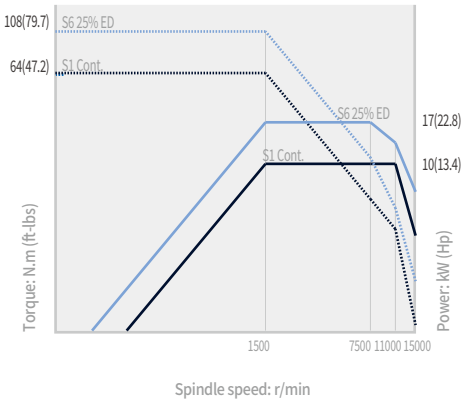

15000r/min Built in OPTION
Power 30/18.5 kW (40.2/24.8 Hp)
Torque 230 N·m (169.7 ft-lbs)

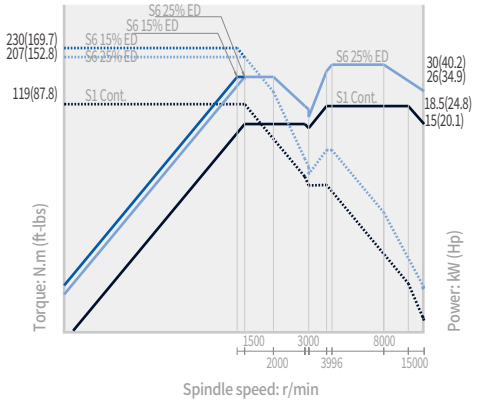

20000r/min Built in OPTION
Power 30/24 kW (42.9/32.2 Hp)
Torque 155 N·m (114.4 ft-lbs)

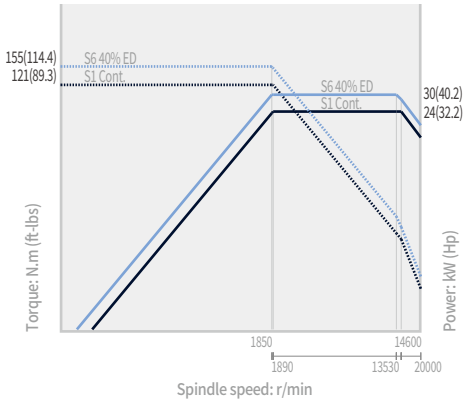

SIEMENS

15000r/min Direct
Power 16.5/11 kW (22.1/14.8 Hp)
Torque 79 N·m (58.3 ft-lbs)

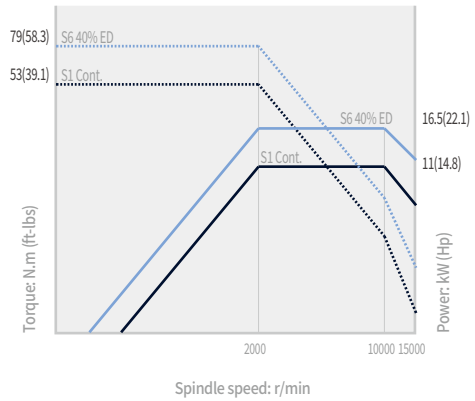

15000r/min Built in OPTION
Power 30/18.5 kW (40.2/24.8 Hp)
Torque 230 N·m (169.7 ft-lbs)

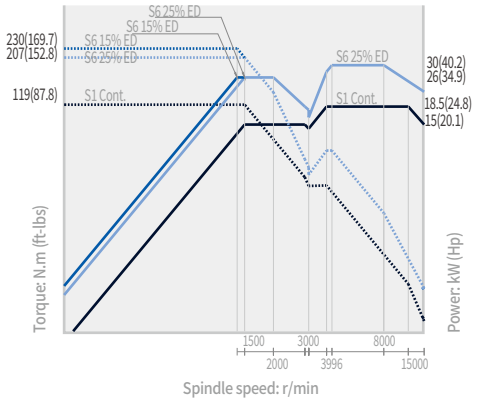

20000r/min Built in OPTION
Power 30/24 kW (42.9/32.2 Hp)
Torque 155 N·m (114.4 ft-lbs)

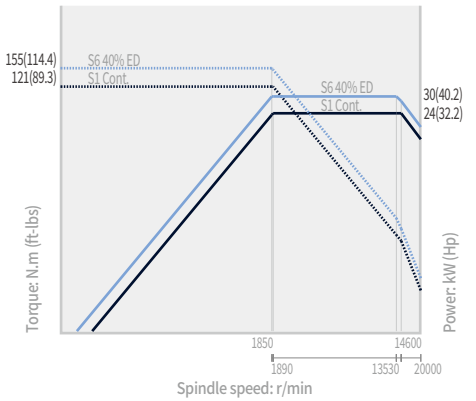

EXTERNAL DIMENSIONS

Units : mm (inch)

TOP

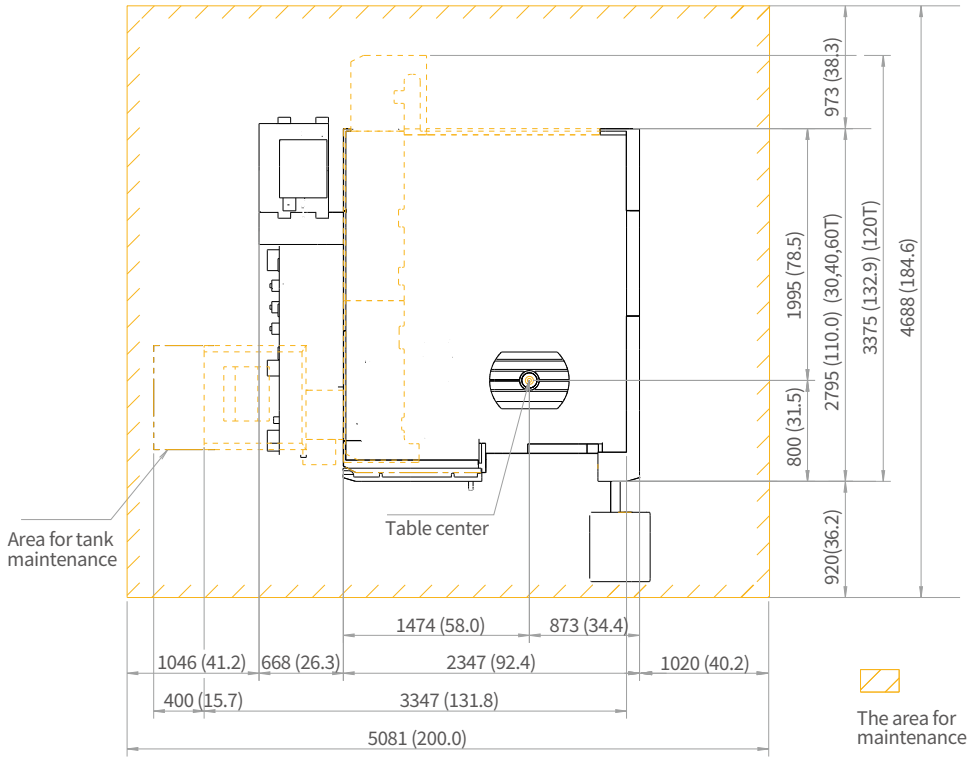

TOP

FRONT

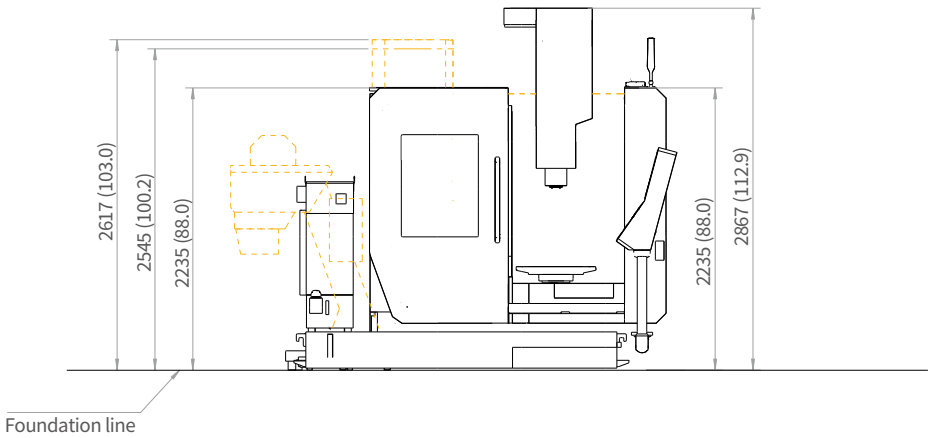

**Some peripheral equipment can be placed in other areas.*

WORKING RANGE

Units : mm (inch)

Front view

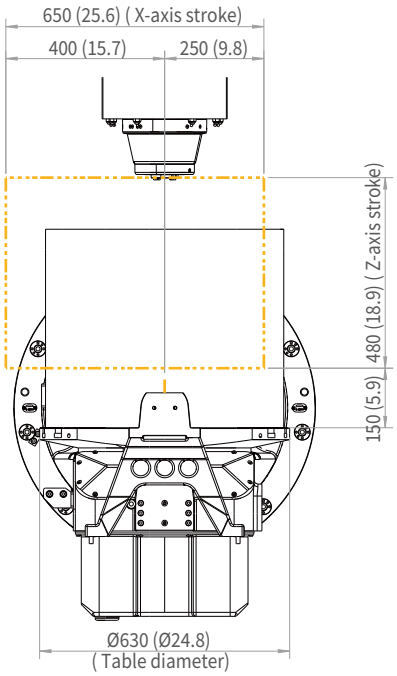

Front view

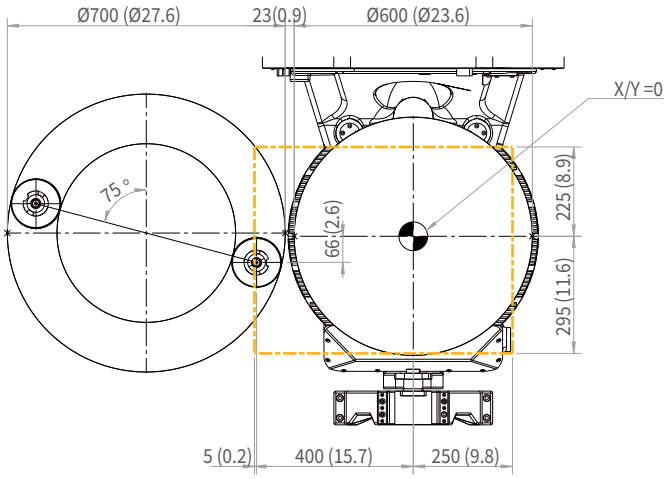

Front view

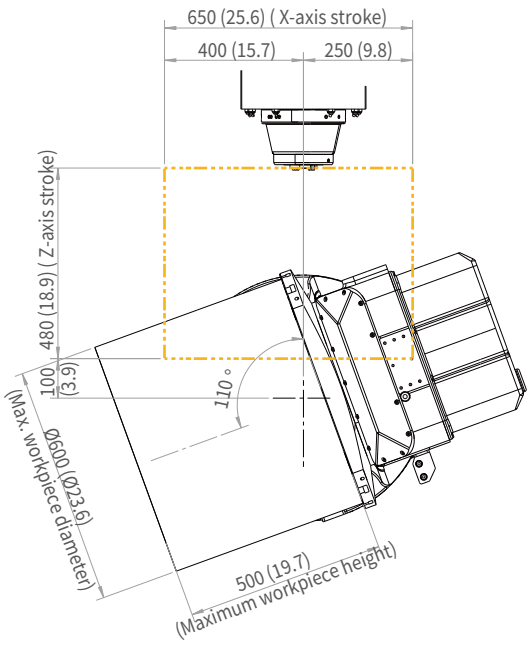

Right view

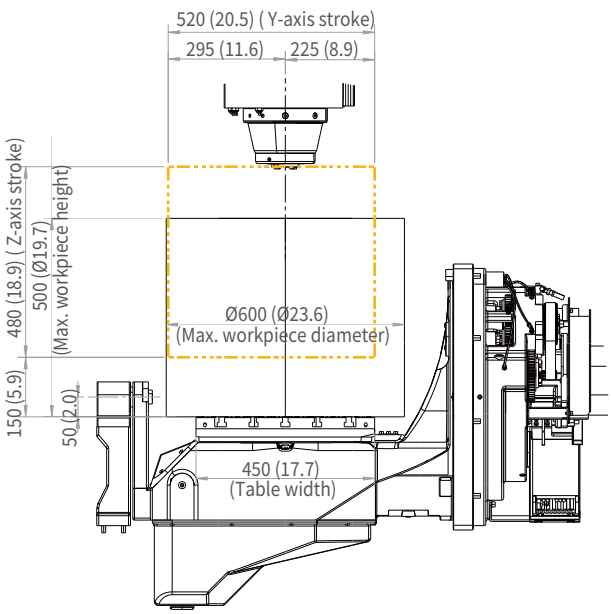

MACHINE SPECIFICATIONS

Description			Unit	DVF 5000 2nd		
Travel distance	X axis		mm (inch)	650 (25.6)		
	Y axis		mm (inch)	520 (20.5)		
	Z axis		mm (inch)	480 (18.9)		
	B axis		deg	B : 140(+110~-30)		
	C axis		deg	360		
Table	Table size		mm (inch)	Ø630 x 450 (Ø24.8 x 17.7)		
	Max. workpiece size		mm (inch)	Ø600 x H500 (Ø23.6 x H19.7)		
	Table loading capacity		kg (lb)	400 (881.8)		
Spindle	Max. speed		r/min	15000 {20000}		
	Max. power		kW (Hp)	CUFOS : 15K Direct 18.5/11 (S6 15%/cont.) 15K Built-in 30/18.5 (S6 25%/cont.) 20K Built-in 37/18.5 (S6 15%/cont.)	TNC7 : 15K Direct 17/10 (S6 25%/cont.) 15K Built-in 30/18.5 (S6 25%/cont.) 20K Built-in 30/24 (S6 40%/cont.)	Sinumerik One : 15K Direct 16.5/11 (S6 40%/cont.) 15K Built-in 30/18.5 (S6 25%/cont.) 20K Built-in 30/24 (S6 40%/cont.)
	Max.torque		N·m (ft-lbs)	CUFOS : 15K Direct 118 15K Built-in 230 20K Built-in 221	TNC7 : 15K Direct 108 15K Built-in 230 20K Built-in 155	Sinumerik One : 15K Direct 79 15K Built-in 230 20K Built-in 155
Rapid traverse rate	X axis		m/min (ipm)	42 (1653.5)		
	Y axis		m/min (ipm)	42 (1653.5)		
	Z axis		m/min (ipm)	42 (1653.5)		
	B axis		r/min	25		
	C axis		r/min	25		
Automatic tool changer	Tool shank			ISO #40		
	Tool storage capa.		ea	30 {40, 60, 120}		
	Max. tool diameter	Continuous	mm (inch)	75 (3.0)		
		Without adjacent tools	mm (inch)	125 (4.9)		
	Max. tool length		mm (inch)	300 (11.8)		
	Max. tool weight		kg (lb)	8 (17.6)		
	Tool change time	T-T-T	sec	1.3/1.5 (60Hz/50Hz)		
		C-T-C	sec	3.8/4.3 (60Hz/50Hz)		
Coolant	Coolant tank capacity		L (gal)	500 (132.1)		
Machine dimensions	Height		mm (inch)	3100 (122.0)		
	Length x Width		mm (inch)	2795 (110.0) (30, 40, 60T) x 2347 (93.5) , 3375 (120T) x 2347 (132.9 x 93.5)		
	Weight		kg (lb)	8000 (17636.7) (30, 40, 60T), 9000 (354.3) (120T)		
Control	NC system		-	CUFOS, TNC640/TNC7, Sinumerik One		

*{ } : Option

WHY 5-Axis machining?

SINGLE SETUP EFFICIENCY

5-axis machining allows you to approach the workpiece from all angles, with complete access to five sides of the part in a single setup. This reduces the overall number of part setups compared to traditional machining, which minimizes machine downtime and maximizes chip making time.

IMPROVED PART ACCURACY

When making parts with multi-sided features using traditional 3-axis machining, multiple part setups are required. This means new inaccuracies can arise each time the workpiece is repositioned. 5-axis machining eliminates stacked tolerances and improves overall part dimensional accuracy.

EXTENDED MACHINE SHOP CAPABILITY

DN Solutions 5-axis machines open up new doors for your machine shop. The increased efficiency will make you instantly more competitive, and full 5-axis machining capabilities give you the opportunity to quote on jobs that previously weren't possible. So, what are you going to make today?

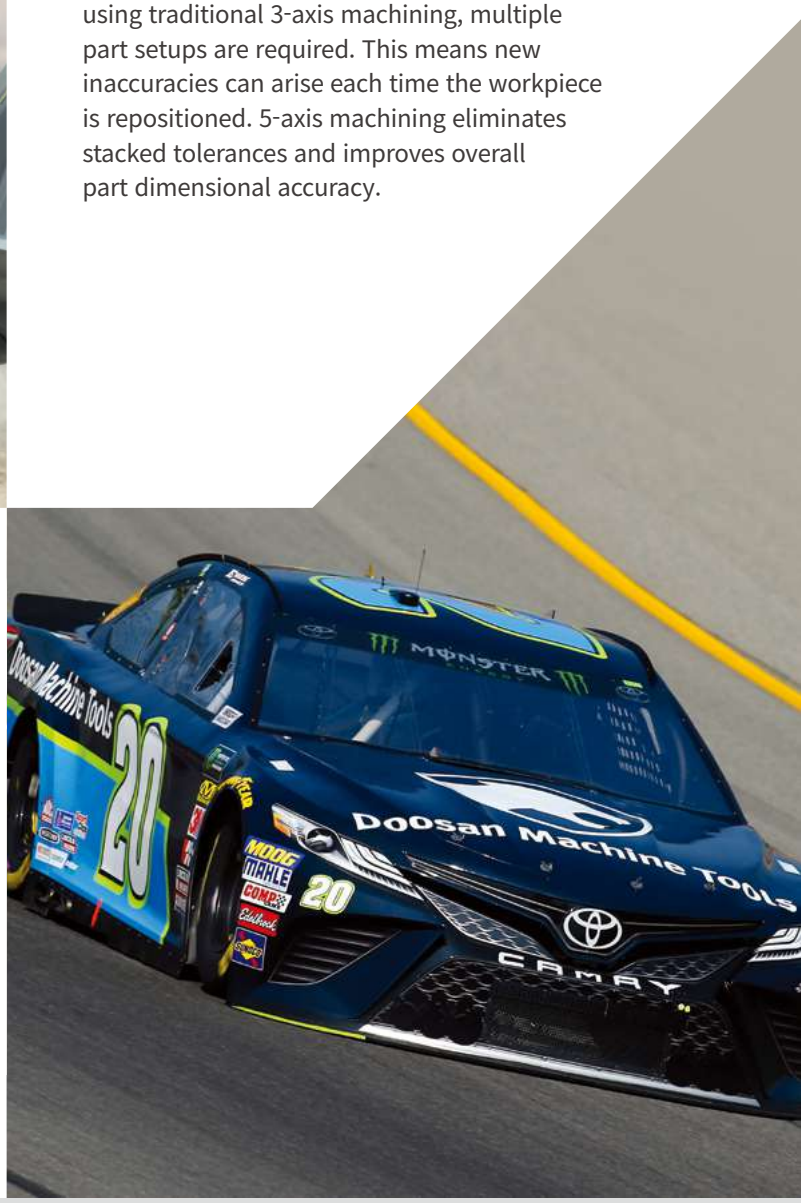

"Compared with similar machines from Japan or Europe, DN Solutions has the same level of precision and quality at a better value for money."

– ***OMGM Group,*** *Italy*

"Our DN Solutions 5-axis is making complex, high precision parts for aerospace and defense. Cycle times have been reduced dramatically."

– ***Aerotech Precision Manufacturing,*** *Great Britain*

RESPONDING TO CUSTOMERS **ANYTIME, ANYWHERE**

DN SOLUTIONS GLOBAL NETWORK

66 COUNTRIES | **140** + SALES NETWORKS | **3** FACTORIES | **6** REGIONAL HQS

CUSTOMER SUPPORT AND SERVICES

WE'RE THERE FOR YOU WHENEVER YOU NEED US.

We help our customers operate at maximum efficiency by providing them with a range of tried, tested and trusted services - from pre-sales consultancy to post-sales support.

FIELD SERVICES

- On-site service
- Machine installation and testing
- Scheduled preventive maintenance
- Machine repair service

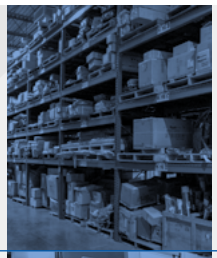

PARTS SUPPLY

- Supplying a wide range of original DN Solutions spare parts
- Parts repair service

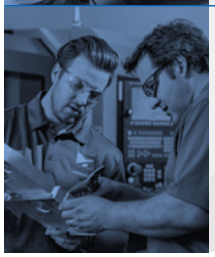

TRAINING

- Programming, machine setup and operation
- Electrical and mechanical maintenance
- Applications engineering

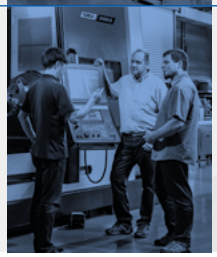

TECHNICAL SUPPORT

- Supports machining methods and technology
- Responds to technical queries
- Provides technical consultancy

DN SOLUTIONS

dn-solutions.com

Head Office

19F, 10, Tongil-ro, Jung-gu Seoul,
Republic of Korea, 04527
Tel: +82-2-6972-0370/0350
Fax: +82-2-6972-0400

DN Solutions Europe

Emdener Strasse 24, D-41540
Dormagen, Germany
Tel: +49-2133-5067-100
Fax: +49-2133-5067-111

DN Solutions China

Room 101,201,301, Building 39 Xinzhuan Highway
No.258 Songjiang District China Shanghai (201612)
Tel: +86 21-5445-1155
Fax: +86 21-6405-1472

DN Solutions America

360 E State PKWY,
Schaumburg, IL. 60173,
United states
Tel: +1-973-618-2500
Fax: +1-973-618-2501

DN Solutions India

No.82, Jakkuar Village
Yelahanka Hobil,
Bangalore-560064
Tel: + 91-80-2205-6900
E-mail: india@dncompany.com

DN Solutions Vietnam

M.O.R.E building 2F, 40A-40B Ut Tich Street, 04 Ward 04,
District Tan Binh District, Ho Chi Minh City, Vietnam
Tel: +84 28-7304-0163

Sales inquiry

sales@dncompany.com

** For more details, please contact DN Solutions.*
** Specifications and information contained within this catalogue may be changed without prior notice.*

ver. EN 250807 SU