DN SOLUTIONS

HIGH PERFORMANCE HORIZONTAL TURNING CENTER

PUMA

PUMA 2100
PUMA 2600
PUMA 3100

Basic information

Basic Structure
Cutting Performance

Detailed Information

Options
Applications
Capacity Diagram
Specifications

Customer Support Service

PUMA 2100/2600/3100 series

PUMA 2100/2600/3100 series has been developed to create full line up of high level 12" to 15" size with model variations from 2 axis to Y axis and sub spindle.

Contents

02 Product Overview

Basic Information

04 Basic Structure
09 Cutting Performance

Detailed Information

10 Standard / Optional Specifications
12 Applications
14 Capacity Diagram
18 Machine / CNC Unit Specifications

26 Customer Support Service

High Performance

These DN Solutions machines offer a high level of machining capability to provide optimum productivity for the customer.

Wide Variation

A wide variety of machine specifications from 2-axis models to turning centers with sub spindles is available to meet your production requirements.

Easy Operation

User-friendly operation panel configurations, EZ Guide i and EZ Work can make easy and comfortable to use various features of the product.

Basic Structure

Box guideways are applied to all axes to prevent vibration, secure dynamic rigidity, and ensure powerful and precise machining.

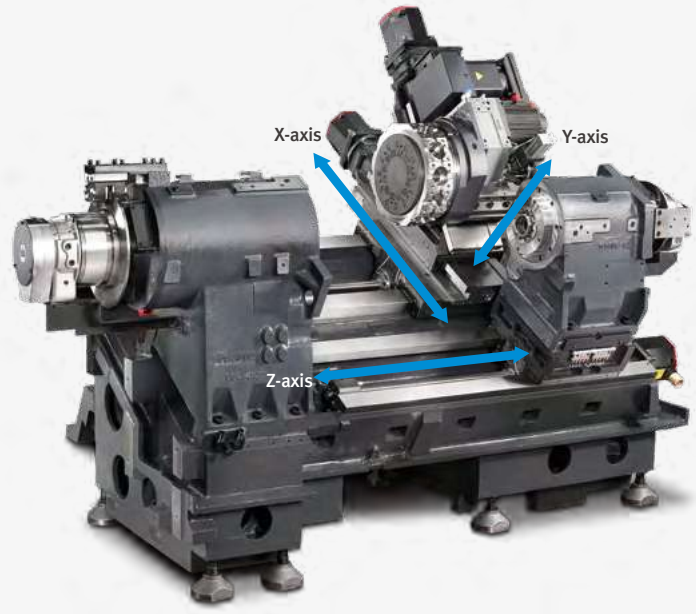

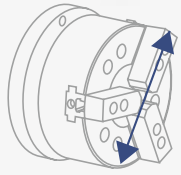

ø 210 mm
(ø 8.3 inch)

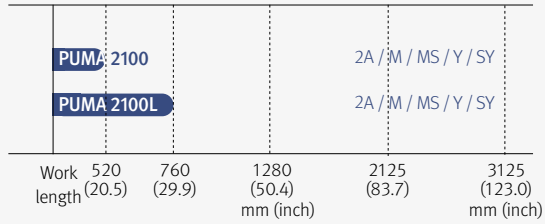

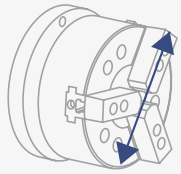

ø 255 mm
(ø 10 inch)

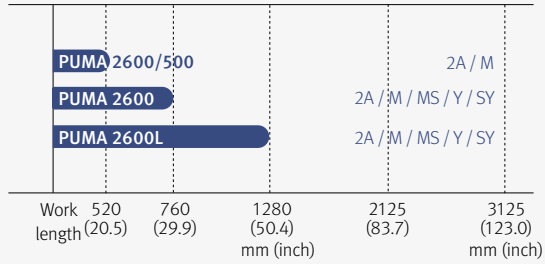

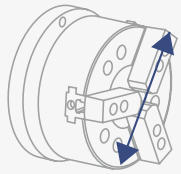

ø 315 mm
(ø 12.4 inch)

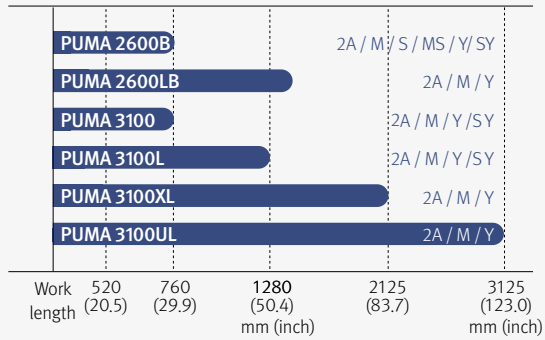

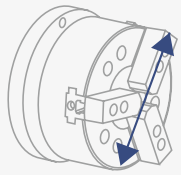

ø 380 mm
(ø15 inch)

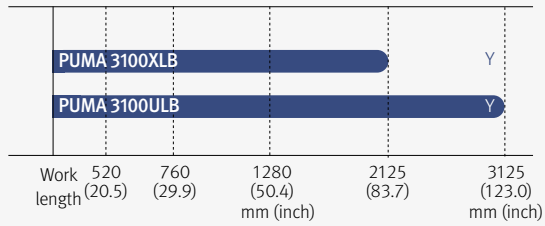

High performance Y axis complex machining

Free operation in all directions of the rotary milling tool using Y axis control perform a variety of complex shape machining easily with high accuracy.

PUMA 2100 / 2600

105(±52.5)mm

(4.1 (±2.1) inch)

PUMA 3100

130(±65)mm

(5.1 (±26) inch)

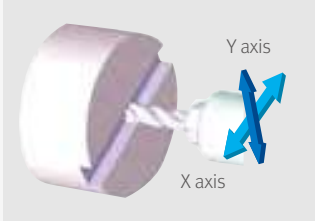

Groove finish cutting using the Y-axis

Multi-face cutting

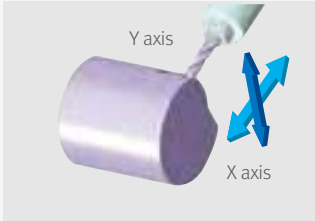

Milling in an eccentric position

Y & X axes circular interpolation

Machining area

These machines provide outstanding performance from general machining to large & long workpiece machining.

Unit : mm (inch)

Model	Max. turning length (A)	Max. turning dia. (B)
PUMA 2100	545 (21.4)	481 (18.9)
PUMA 2100M / MS / Y / SY	520 (20.5)	406 (16.0)
PUMA 2100L	785 (30.9)	481 (18.9)
PUMA 2100LM / LMS / LY / LSY	760 (29.9)	406 (16.0)
PUMA 2600	790 (31.1)	481 (18.9)
PUMA 2600M / MS / Y / SY	760 (29.9)	376 (14.8)
PUMA 2600L	1310 (51.6)	481 (18.9)
PUMA 2600LM / LMS / LY / LSY	1280 (50.4)	376 (14.8)
PUMA 2600/500	550 (21.7)	481 (18.9)
PUMA 2600M/500	520 (20.5)	376 (14.8)
PUMA 2600B / SB	755 (29.7)	481 (18.9)
PUMA 2600LB	1275 (50.2)	481 (18.9)
PUMA 2600MB / MSB / YB / SYB	725 (28.5)	376 (14.8)
PUMA 2600LMB / LYB	1245 (49.0)	376 (14.8)
PUMA 3100	790 (31.1)	525 (20.7)
PUMA 3100M / Y	765 (30.1)	420 (16.5)
PUMA 3100L	1310 (51.6)	525 (20.7)
PUMA 3100LM / LY	1285 (50.6)	420 (16.5)
PUMA 3100XL	2150 (84.7)	525 (20.7)
PUMA 3100XLM / XLY / XLYB	2125 (83.7)	420 (16.5)
PUMA 3100UL	3150 (124.0)	525 (20.7)
PUMA 3100ULM / ULY / ULYB	3125 (123.0)	420 (16.5)

Spindle

Applying superior spindle motor & increase rigidity of headstock, to achieve stable performance during heavy & high speed machining.

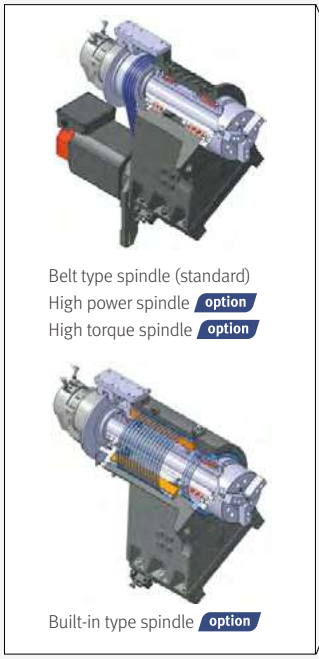

Model	Type	Max. speed r/min	Max. power kW (Hp)	Max. torque N·m (ft-lbs)
PUMA 2100	Belt	4500	25 (33.5)	247 (182.3)
PUMA 2600	Belt	3500	30 (40.2)	327 (241.3)
PUMA2600/500	Belt	3500	25 (33.5)	322 (237.6)
PUMA 2600B	Belt	2800	26 (34.9)	1123 (829)
PUMA 3100/L	Belt	2800	26 (34.9)	1123 (829)
	High torque*	2800	35 (46.9)	1613 (1190.4)
	Built-in	3000	30 (40)	1203 (888)
PUMA 3100XL/UL	Belt	2800	26 (34.9)	1123 (829)
	High power	2800	30 (40)	1150 (848.7)
	High torque*	2800	35 (46.9)	1613 (1190.4)
	Built-in	3000	30 (40)	1203 (888)
PUMA 3100XLYB/ULYB	Belt	2000	30 (40)	1611 (1188.9)

Sub spindle

Sub spindle function allow rear side cutting in a single setup.

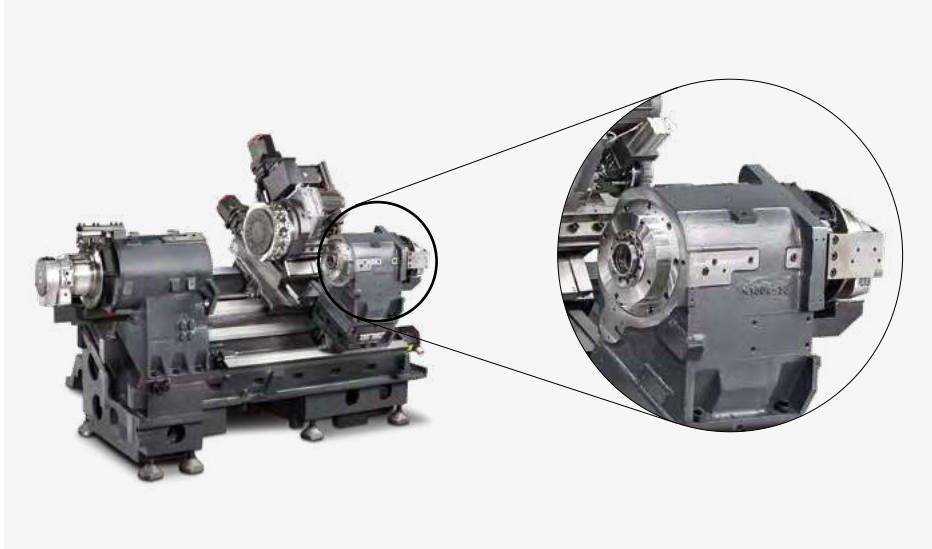

Model	Type	Max. speed r/min	Max. power kW (Hp)	Max. torque N·m (ft-lbs)
PUMA 2100/ PUMA 2600 / PUMA 2600B	Belt	4500	7.5 (10)	85 (61)
PUMA 3100	Built-in	4000	30 (40)	600 (442.8)

Turret

Turret rotation is controlled by servo motor for fast and reliable tool selection. DN Solutions's unique BMT turret design is used on M and Y specification models to boost heavy duty milling performance.

2-axis model

PUMA 2100 / 2600
No. of tool stations

12st

PUMA 3100
No. of tool stations

10st
12st option

M,Y Model

PUMA 2100 : BMT 55P / BMT 65P
PUMA 2600 / 3100 : BMT 65P
No. of tool stations

12st

Position index

12index
24index option

16st turret for Y axis model option

PUMA 2100 / 2600 : BMT 55P
No. of tool stations

16st

Position index

16index

Available Model

- PUMA 2100Y / LY / SY / LSY
- PUMA 2600Y / LY / SY / LSY

Rotary tool power-torque diagram

Max. power : 5.5 kW (7 Hp)
Max. speed : 5000 r/min

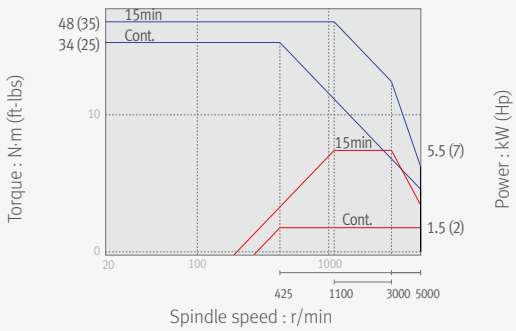

Rotary tool power-torque diagram option

Max. power : 7.5 kW (10 Hp)
Max. speed : 5000 r/min

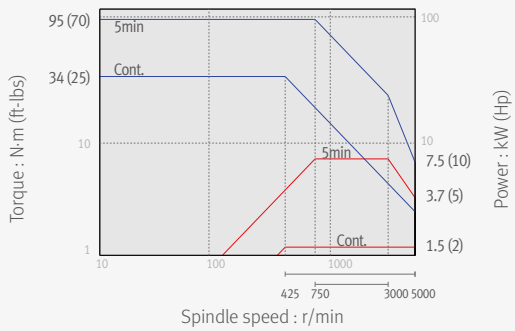

* BMT65P only

Tailstock

High rigidity hydraulic tailstock is rigidly clamped to the bed slide way to provide stable support for long workpieces.

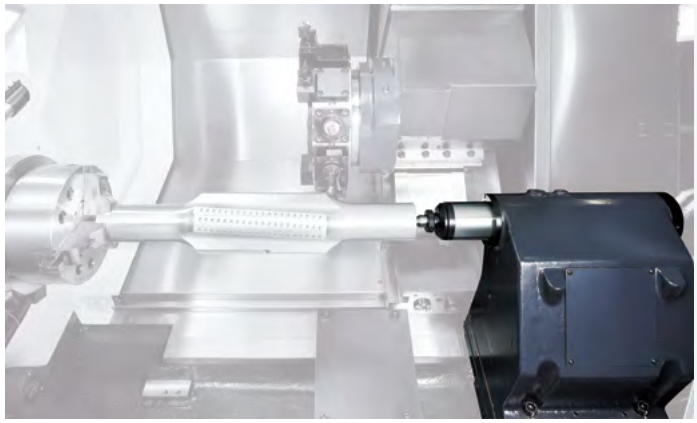

Tailstock type

- Manual
- Programmable
- Servo driven

Tailstock type

Tailstock type		PUMA 2100 / L series	PUMA 2600 / L series PUMA 3100 / L series	PUMA 3100XL / UL series
Manual	Live center MT4	Standard	Not available	Not available
	Built-in center MT3	Option		
	Live center MT5	Not available	Standard	
	Built-in center MT4		Option	
Programmable	Live center MT4	Option	Not available	Not available
	Built-in center MT3			
	Live center MT5	Not available	Option	
	Built-in center MT4			
	Built-in center MT5		Not available	Standard
Servo driven	Live center MT4	Option	Not available	Not available
	Built-in center MT3			
	Live center MT5	Not available	Option	
	Built-in center MT4			

Tailstock EZ function

In programmable tail stock, the Z-axis position of tail stock is recorded automatically as the clamped position of tail stock.

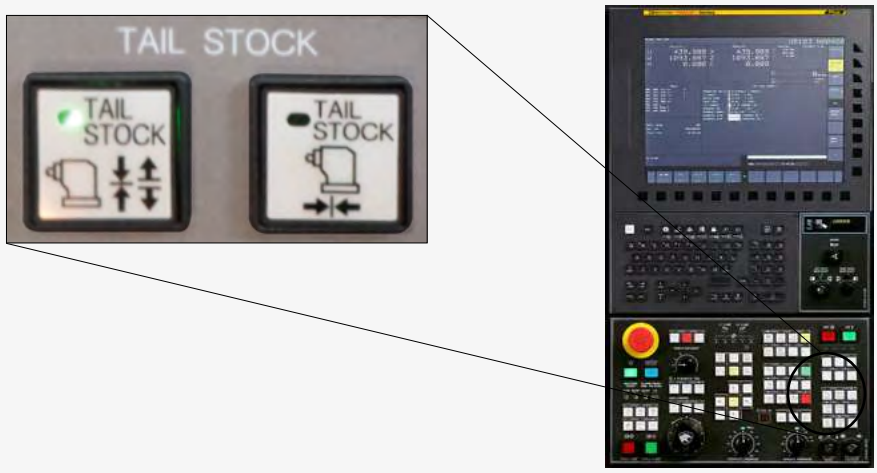

Standard / Optional Specifications

Various options are available to satisfy the customers' requirements.

● Standard ○ Optional △: Pre-discussion is required X Not applicable

NO.	Description	PUMA 2100(L) / 2600(L)					PUMA 3100 Std./L			PUMA 3100 XL/UL		
		2-axis Std.	M	MS	Y	SY	2-axis Std.	M	Y	2-axis Std.	M	Y/YB
1	Special chucks	△	△	△	△	△	△	△	△	△	△	△
2	Soft jaws	●	●	●	●	●	●	●	●	●	●	●
3	Dual pressure chucking	○	○	○	○	○	○	○	○	○	○	
4	Hydraulic chuck pressure switch	○	○	○	○	○	○	○	○	○	○	○
5	Chuck clamp confirmation	○	○	○	○	○	○	○	○	○	○	○
6	Tail stock center : Live center	●	●	X	●	X	●	●	●	X	X	X
7	Tail stock center : Dead center	○	○	X	○	X	○	○	○	●	●	●
8	Tail stock : Manual	●	●	X	●	X	●	●	●	X	X	X
9	Tail stock : Programmable	○	○	X	○	X	○	○	○	●	●	●
10	Tail stock : Servo driven	○	○	X	○	X	○	○	○	X	X	X
11	Automatic quill advance & retract	○	○	X	○	X	○	○	○	○	○	○
12	Rotary tool holder	X	●	●	●	●	X	●	●	X	●	●
13	Tool setter : Manual	○	○	○	○	○	○	○	○	○	○	○
14	Tool setter : Automatic_electric	○	○	○	○	○	○	○	○	○	○	○
15	Auto workpiece measurement	○	○	○	○	○	○	○	○	○	○	○
16	Linear scale (X-axis)	○	○	○	○	○	○	○	○	○	○	○
17	Linear scale (Z-axis)	○	○	○	○	○	○	○	○	○	○	○
18	Linear scale (Y-axis)	X	X	X	○	○	X	X	○	X	X	○
19	Feedback system : Absolute position encoder	●	●	●	●	●	●	●	●	●	●	●
20	Bar feeder interface	○	○	○	○	○	○	○	○	○	○	○
21	Bar puller	△	△	△	△	△	△	△	△	X	X	X
22	Workpiece ejector	X	X	○	X	○	X	X	X	X	X	X
23	Parts catcher with box	○	○	○	○	○	△	△	△	X	X	X
24	Parts catcher with conveyor	○	○	○	○	○	△	△	△	X	X	X
25	Workpiece cut off confirmation	X	X	○	X	○	X	X	X	X	X	X
26	Automatic front door : with safety device	○	○	○	○	○	○	○	○	○	○	○
27	Chip conveyor type : Right side	○	○	○	○	○	○	○	○	○	○	○
28	Chip conveyor type : Rear side *1	○	○	○	○	○	○	○	○	X	X	X
29	Chip bucket	○	○	○	○	○	○	○	○	○	○	○
30	TSC for main / left spindle	○	○	○	○	○	○	○	○	○	○	○
31	Oil skimmer	○	○	○	○	○	○	○	○	○	○	○
32	Coolant level switch : Sensing level - Low	○	○	○	○	○	○	○	○	○	○	○
33	Water soluble Coolant Chiller**	○	○	○	○	○	○	○	○	○	○	○
34	Oil mist collector	○	○	○	○	○	○	○	○	○	○	○
35	Coolant blower	○	○	○	○	○	○	○	○	○	○	○
36	Air blower	○	○	○	○	○	○	○	○	○	○	○
37	Air gun	○	○	○	○	○	○	○	○	○	○	○
38	Signal tower (yellow, red, green)	○	○	○	○	○	○	○	○	○	○	○
39	Gantry loader	△	△	△	△	△	△	△	△	△	△	△
40	V-stand for shaft workpiece	○	○	X	○	X	○	○	○	X	X	X
41	Quick change tooling(CAPTO)	○	○	○	○	○	○	○	○	○	○	○
42	Sketch-turn S/W	○	○	○	○	○	○	○	○	○	○	○

*1 : PUMA 2100/L, PUMA 2600, PUMA 3100 only

* Please contact DN Solutions to select detailed steady rest specifications.

** Technical consultation is mandatory for the chilling of non-water soluble coolant

NO.	Description		PUMA 2100(L) / 2600(L)				
			2-axis Std.	M	MS	Y	SY
43	Customized Special Option	MAIN SPINDLE TSC	○	○	○	SD17568-P2100 II-TSC (PUMA 2100Y II /LY II), SD18582-P2600 II-TSC (PUMA 2600Y II /LY II)	SD17568-P2100 II-TSC (PUMA 2100SY II/LSY II), SD18582-P2600 II-TSC (PUMA 2600SY II/LSY II)
44		4JAW MAIN CHUCK	MHF208 (PUMA 2100/L/LS), MHF210 (PUMA 2600/L/LS)	MHF208 (PUMA 2100M/LM) / MHF210 (PUMA 2600M/LM)	MHF208 (PUMA 2100MS/LMS) / MHF210 (PUMA 2600MS/LMS/LMSB)	MHF208 (PUMA 2100Y/LY/Y II /LY II) MHF210 (PUMA 2600Y/LY/Y II/LY II)	MHF208 (PUMA 2100SY/LSY/SY II/LSY II) MHF210 (PUMA 2600SY/LSY/LSYB/SY II/LSY II)
45		WORKPIECE MEASUREMENT	OLP40 (PUMA 2100/L/LS, PUMA 2600/L/LS/B/LB/SB)	OLP40 (PUMA 2100M/LM, PUMA 2600M/LM/MB/LMB/M-500)	OLP40 (PUMA 2100MS/LMS, PUMA 2600MS/LMS/MSB)	OLP40 (PUMA 2100Y/LY/Y II/LY II, PUMA 2600Y/LY/Y II/LY II/YB II/LYB II)	OLP40 (PUMA 2100SY/LSY/SY II/ LSY II/SYB II/LSYB II/, PUMA 2600SY/LSY/LSYB/SY II/LSY II)
46		BEAM SENSOR TYPE SAFETY SWITCH	KEYENCE (PUMA 2600B/LB/SB)	KEYENCE (PUMA 2600MB/LMB)	KEYENCE (PUMA 2600MSB)	○	○

NO.	Description		PUMA 3100 / L			PUMA 3100 XL/UL		
			2-axis Std.	M	Y	2-axis Std.	M	Y
43	Customized Special Option	MAIN SPINDLE TSC	○	○	○	○	○	○
44		4JAW MAIN CHUCK	○	○	○	○	○	○
45		WORKPIECE MEASUREMENT	OLP40 (PUMA 3100/L/XL/UL)	OLP40 (PUMA 3100M/LM/XLM/ULM)	OLP40 (PUMA 3100Y/LY/XLY/ULY)	○	○	OLP40 (PUMA 3100XLYB/ULYB)
46		BEAM SENSOR TYPE SAFETY SWITCH	○	○	○	○	○	○

* Please contact your DN Solutions representative for detailed machine information.

* When using a semi-synthetic type or synthetic type, contact our sales representative or service center in advance.

Steady rest

○ Optional X Not applicable

Steady Rest		PUMA 2100		PUMA 2600		PUMA 3100	
		Std.	L	Std.	Std.	Std./L	XL/UL
Type	Programmable	○	○	○	○	○	○
	Servo driven *1	X	X	X	X	X	○
Size	SLU-1	○	○	○	○	X	X
	SLU-2	○	○	○	○	○	○
	SLU-B3.1	X	○	○	○	X	X
	SLU-3.1	X	X	X	X	○	○
	SLU-3.2	X	X	X	X	X	○
	SLU-4	X	X	X	X	X	○ *2
	SLU-B4	X	X	X	X	X	○
	STA-1	○	○	○	○	X	X
	STA-2	○	○	○	○	○	○
	STA-3.1	X	X	X	X	○	○
	STA-3.2	X	X	X	X	X	○
	STA-4	X	X	X	X	X	○
	AX-1	○	○	○	○	○	○
	AX-2	○	○	○	○	○	○
	AX-3	○	○	○	○	○	○
	AX-4	○	○	○	○	○	○
	AX-5	○ *3	○ *3	○ *3	○ *3	○ *3	○
	AX-6	X	X	X	X	X	○ *3
	AX-7	X	X	X	X	X	○ *3

High pressure coolant

Steady Rest		PUMA 2100		PUMA 2600		PUMA 3100	
		Std.	L	Std.	L	Std. /L	XL/UL
Type	Hydraulic	○	○	○	○	○	○
	Programmable	○	○	○	○	○	○
	Servo driven *1	X	X	X	X	X	○
Size	SLU-1	○	○	○	○	X	X
	SLU-2	○	○	○	○	○	○
	SLU-B3.1	X	○	○	○	X	X
	SLU-3.1	X	X	X	X	○	○
	SLU-3.2	X	X	X	X	X	○
	SLU-4	X	X	X	X	X	○ *2
	SLU-B4	X	X	X	X	X	○
	STA-1	○	○	○	○	X	X
	STA-2	○	○	○	○	○	○
	STA-3.1	X	X	X	X	○	○
	STA-3.2	X	X	X	X	X	○
	STA-4	X	X	X	X	X	○

*1 : Rack & Pinion type. *2 : SLU-4 is not available in servo driven type.

*3 : E-type is unavailable

* Recommend using coolant chiller

Fire Safety Precautions

There is a high risk of fire when using non-water-soluble cutting fluids, processing flammable materials, neglecting the controlled and careful use of coolants and modifying the machine without the consent of the manufacturer. Always check the SAFETY GUIDELINES carefully before using the machine.

Peripheral equipments

Oil skimmer option

The oil skimmer keeps coolant and lubricant isolated from each other for extendinglifecycle of coolant.

Tool setter option

The tool setter facilitates setting of tools, and fast and precise length compensation of abraded tool.

Part catcher option

The part catcher automatically accepts parts completed of machining, and ejects them out of the system.

Coolant chiller option

Coolant chiller is highly recommended to prevent temperature rise and minimize thermal deformation, when using a water-insoluble coolant or high-pressure coolant system of which the power is over 1.5 kw.

Mist collector option

The mist collector absorbs airborne oil vapor and fine dusts in the system to improve working environment.

Collet chuck option

The collet chuck is ideal for loading workpiece of small diameter and light weight.

Coolant Blower option

Singnal tower option

Quick change CAPTO option

The Quick Change Tool system simplifies tool change operation. Recommended for users who need to change tools frequently or reduce the set-up time.

DN Solutions Fanuc i Plus

DN Solutions Fanuc i Plus is optimized for maximizing customer productivity and convenience.

15 inch screen + New OP

DOOSAN Fanuc i Plus' operation panel enhances operating convenience by incorporating common-design buttons and layout, and features the Qwerty keyboard for fast and easy operation.

DN Solutions Fanuc i Plus
- 15 inch color display
  Intuitive and user-friendly design

USB & PCMCIA card
QWERTY keyboard
- EZ-guide i standard
- Ergonimic operator panel
- 2MB Memory
- Hot key

iHMI Touch screen option
- iHMI provides an intuitive interface that utilizes a touch screen for quick and easy operation

Variety of applications
- Providing various applications related to PLANNING, MACHINING, IMPROVEMENT, and UTILITY for customer convenience.

EZ-Guide i

Using the DOOSAN EZ-Guide i, users can create a cutting program for any desired shape, including patterns, by entering figures only.

Example programming

Cutting shape

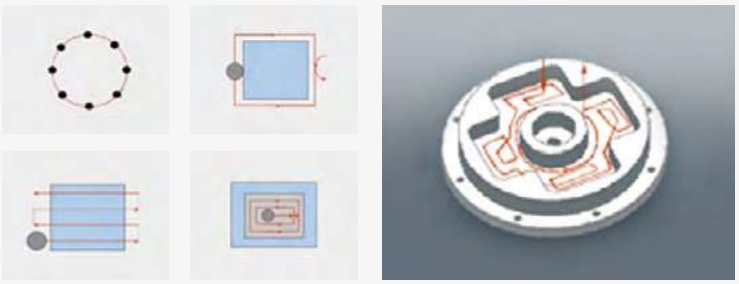

EZ-Guide i screen

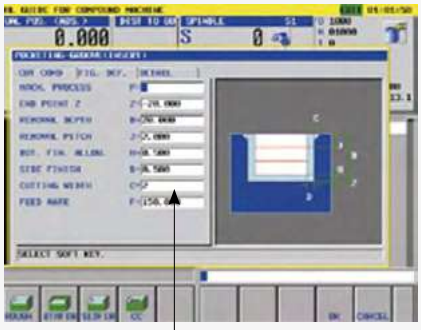

Enter the dimensions of the shape.

Automatic creation of cutting program

```
O7000 (SAMPLE PROGRAM) ;
…
M3 S1500 ;
G0 X50. Y125. ;
G0 Z30. ;
G1040 T0.5 J3. H0.2 K0.5 … ;
G1020 H120. V50. U37. W68. … ;
G0 Z80. ;
M5 ;
```

A cutting program is automatically created with the entered values.

SKETCH-TURN option

DN Solutions Conversational programming software for PC

- Easy to learn for beginners
- Time savings in programming
- Reduce processing cycle time

SIEMENS S828D

SIEMENS CNC optimized for DN Solutions machine tools maximizes users' productivity.

15.6 inch screen + New OP

The newly-designed operation panel enhances operating convenience by incorporating common-design buttons and layout, and features the Qwerty keyboard for fast and easy operation.

15.6-inch display

- USB (standard)
- QWERTY Keyboard (standard)

Conversational Convenient function

The machining monitoring function developed on the basis of the Shop Turn – an interactive machining support function of SIEMENS – provides users with cutting, servicing and maintenance screens for easy and convenient machine operation.

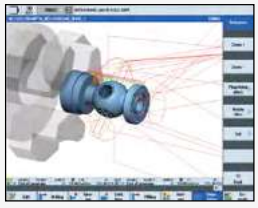

Cutting and operation support function

This function shows a cutting and tool path simulation of a cutting program on a real-time basis.

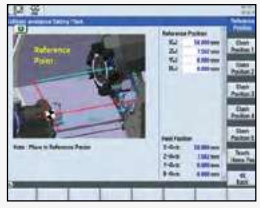

[offset]
↓
[operating parameter]
↓
[attachment setting]
↓
[Collision avoidance]

Operation safety function

Spindle and Turret's interference could be checked before crash. So that it Protect operator's mistake.
[offset] [operating parameter]
[attachment setting] [Collision avoidance]

[offset]
↓
[operating parameter]
↓
[TC service]

Maintenance and service convenience function

Maintenance and service of major units and peripheral devices, timer setting and parts counter setting can be easily carried out on a convenient screen.

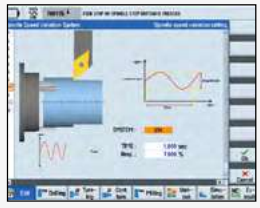

[various]
↓
[attachment]
↓
[DSSV]

Machining accuracy improvement

The NC controls spindle speed at an optimal level for precision threading and turning, making it possible to improve surface roughness automatically.

Before applying the function

After applying the function

Spindle power-torque diagram (FANUC)

PUMA 2100 series

Belt type

Max. speed
4500 r/min

Max. power
22 kW
(29.5 Hp)

Max. torque
365 N·m
(269.4 ft-lbs)

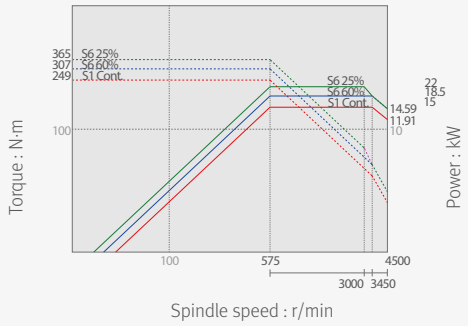

Belt type

Max. speed
4500 r/min

Max. power
18.5 kW
(25 Hp)

Max. torque
313 N·m
(231.0 ft-lbs)

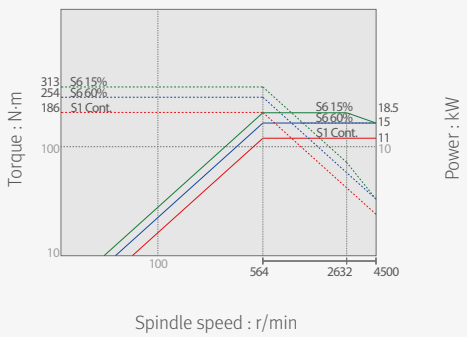

Belt type

Max. speed
4500 r/min

Max. power
25 kW
(33.5 Hp)

Max. torque
247 N·m
(182.3 ft-lbs)

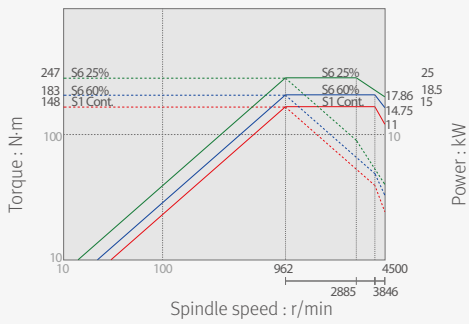

PUMA 2600 series

Belt type

Max. speed
3500 r/min

Max. power
30 kW
(40.2 Hp)

Max. torque
327 N·m
(241.3 ft-lbs)

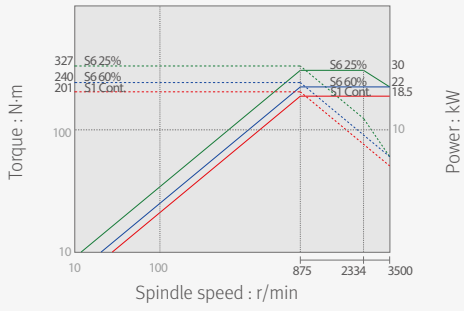

PUMA 2600 / 500, PUMA 2600M / 500

Belt type

Max. speed
3500 r/min

Max. power
25 kW
(33.5 Hp)

Max. torque
322 N·m
(237.6 ft-lbs)

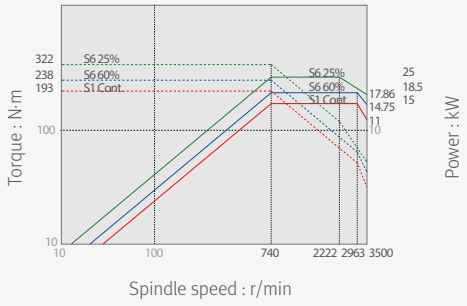

PUMA 2600, 2600/500, 2600M/500 series

Belt type

Max. speed
3500 r/min

Max. power
26 kW
(34.9 Hp)

Max. torque
735 N·m
(542.4 ft-lbs)

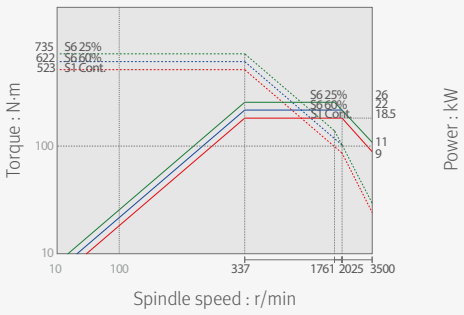

Belt type

Max. speed
3500 r/min

Max. power
22 kW
(30 Hp)

Max. torque
622 N·m
(459.0 ft-lbs)

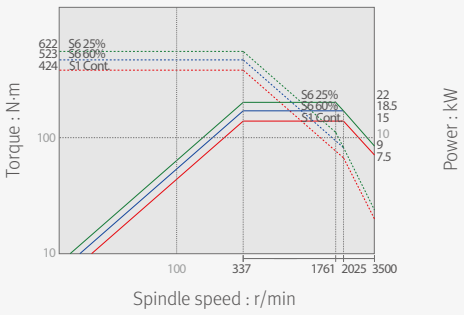

Spindle power-torque diagram (FANUC)

PUMA 2600B / 3100 series

Belt type

Max. speed
2800 r/min

Max. power
26 kW
(34.9 Hp)

Max. torque
1123 N·m
(828.8 ft-lbs)

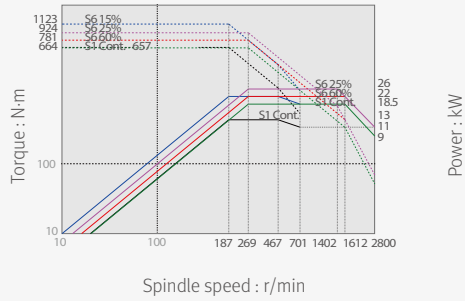

Belt type option **With Gear Box** (PUMA 2600B/LB, PUMA 3100/L/XL/UL only)

Max. speed
2800 r/min

Max. power
35 kW
(46.9 Hp)

Max. torque
1613 N·m
(1190.4 ft-lbs)

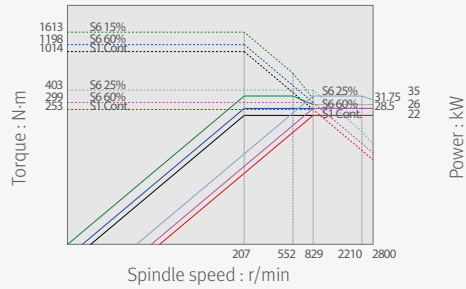

PUMA 3100 series

빌트-인 타입

Max. speed
3000 r/min

Max. power
30 kW
(40.2 Hp)

Max. torque
1204 N·m
(888.6 ft-lbs)

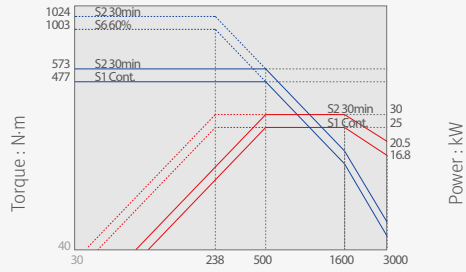

PUMA 3100 XL/UL

Belt type

Max. speed
2800 r/min

Max. power
30 kW
(40.2 Hp)

Max. torque
1150 N·m
(848.7 ft-lbs)

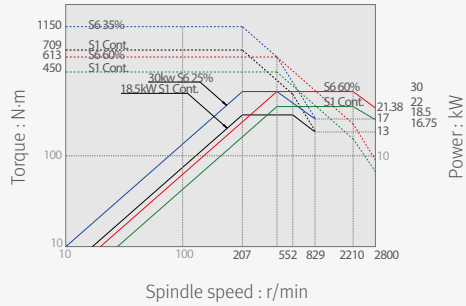

PUMA 3100 XLYB/ULYB

Belt type

Max. speed
2000 r/min

Max. power
30 kW
(40.2 Hp)

Max. torque
1611 N·m
(1188.9 ft-lbs)

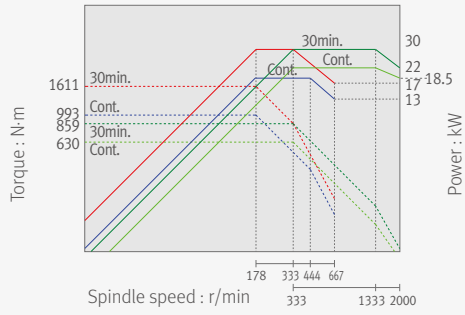

PUMA 2100/2600/2600B

Sub spindle_ Belt type

Max. speed
4500 r/min

Max. power
7.5 kW
(10.1 Hp)

Max. torque
85 N·m
(62.7 ft-lbs)

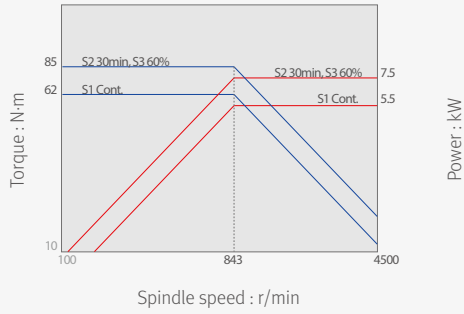

PUMA 3100

Sub spindle_ Built-in type

Max. speed
4000 r/min

Max. power
30 kW
(40.2 Hp)

Max. torque
600 N·m
(442.8 ft-lbs)

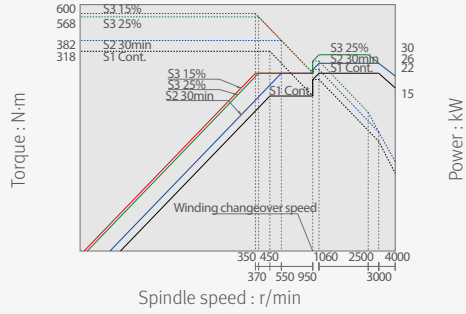

Spindle power-torque diagram

Rotary Tool Power (FANUC)

5.5kW

Max. speed
5000 r/min

Max. power
5.5 kW
(7.4 Hp)

Max. torque
48 N·m
(35.4 ft-lbs)

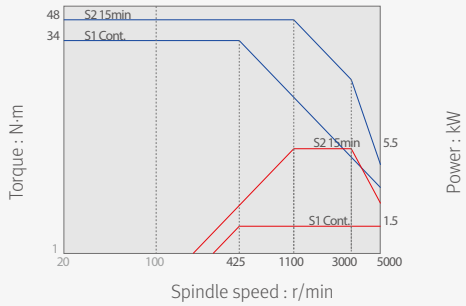

7.5kW option

Max. speed
5000 r/min

Max. power
7.5 kW
(10.1 Hp)

Max. torque
95 N·m
(70.1 ft-lbs)

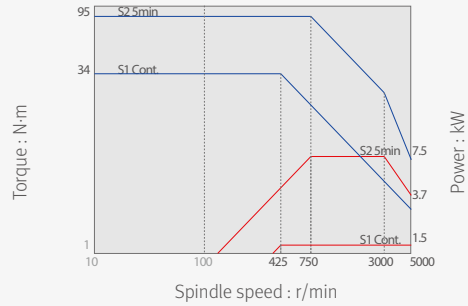

Spindle power-torque diagram (SIEMENS)

PUMA 2100

Belt type

Max. speed
4500 r/min

Max. power
26.4 kW
(35.4 Hp)

Max. torque
294 N·m
(217.0 ft-lbs)

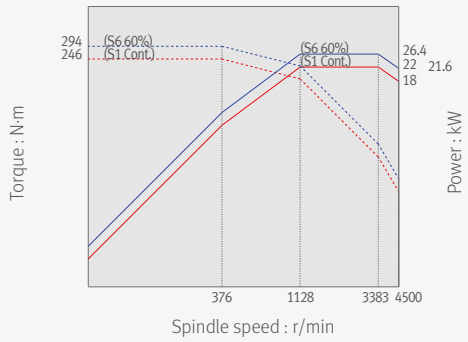

PUMA 2600

Belt type

Max. speed
3500 r/min

Max. power
33.6 kW
(45.1 Hp)

Max. torque
617 N·m
(455.3 ft-lbs)

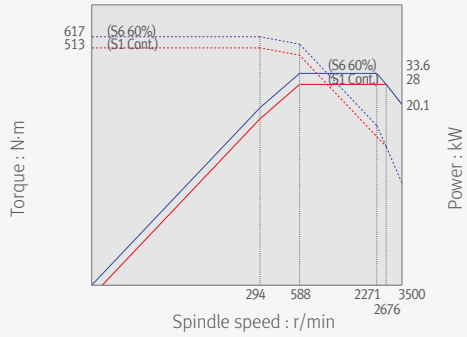

PUMA 3100

Belt type

Max. speed
2800 r/min

Max. power
30 kW
(40.2 Hp)

Max. torque
1112 N·m
(820.7 ft-lbs)

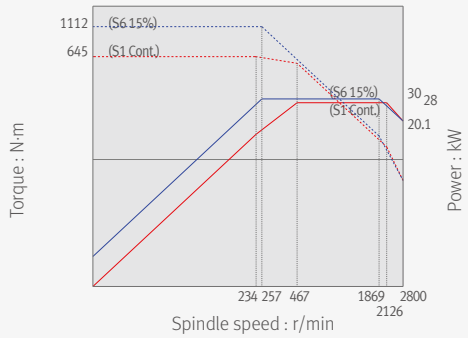

Built-in type

Max. speed
3000 r/min

Max. power
30 kW
(40.2 Hp)

Max. torque
1240 N·m
(915.1 ft-lbs)

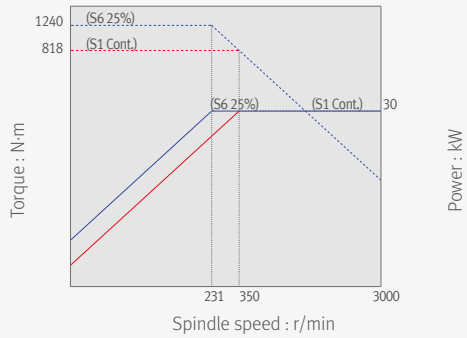

PUMA 2100/2600/2600B

Sub spindle_ Belt type

Max. speed
4500 r/min

Max. power
8.3 kW
(11.1 Hp)

Max. torque
1112 N·m
(60.5 ft-lbs)

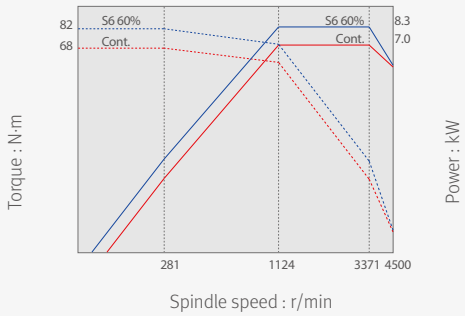

Rotary Tool power

Max. speed
5000 r/min

Max. power
7.79 kW
(10.4 Hp)

Max. torque
79.8 N·m
(58.9 ft-lbs)

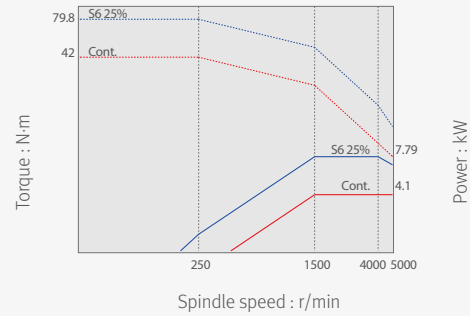

External Dimensions

PUMA 2100 / 2600

Unit : mm (inch)

Top view

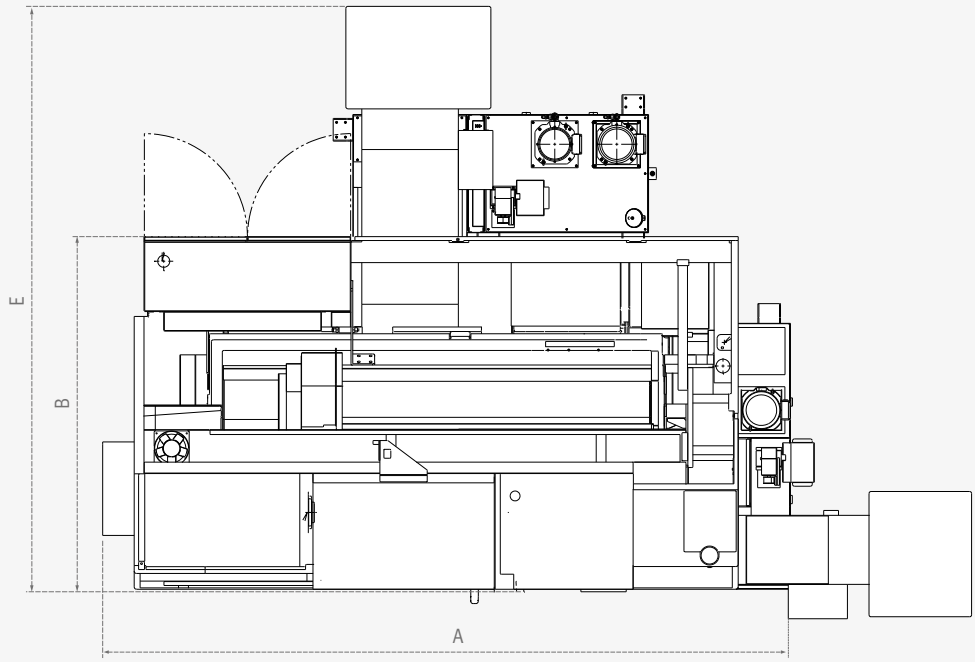

Front view

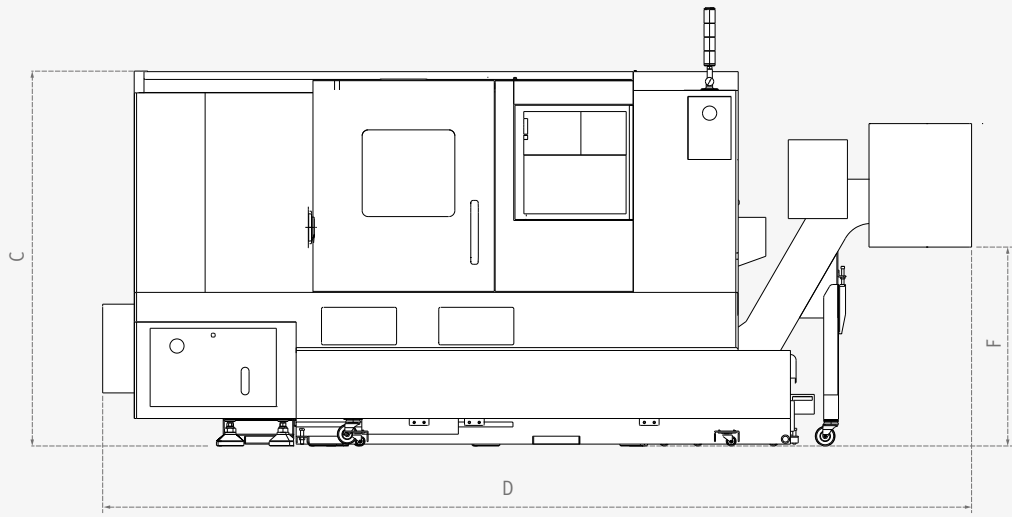

Model	A (Length)	B (Width)	C (Height)	D (Length with side chip conveyor)	E (Width with rear chip conveyor)	F (Height of ground to chip outlet)
PUMA 2100	3330 (131.1)	1905 (75.0)	1900 [2163] (74.8 [85.2])	4210 (165.7)	3074 (121.0)	1010 (39.8)
PUMA 2100L	3550 (139.8)	1905 (75.0)	1900 [2163] (74.8 [85.2])	4430 (174.4)	3074 (121.0)	1010 (39.8)
PUMA 2600/500	3430 (135.0)	1905 (75.0)	1900 (74.8)	4310 (169.7)	3074 (121.0)	1010 (39.8)
PUMA 2600	3650 (143.7)	1905 (75.0)	1900 [2163] (74.8 [85.2])	4530 (178.3)	3074 (121.0)	1010 (39.8)
PUMA 2600L	4335 (170.7)	2009 (79.1)	1900 [2163] (74.8 [85.2])	5389 (212.2)	-	1010 (39.8)
PUMA 2600B	3918 (154.3)	1905 (75.0)	1900 (74.8)	4798 (188.9)	3074 (121.0)	1010 (39.8)
PUMA 2600LB	4438 (174.7)	2009 (79.1)	1900 (74.8)	5492 (216.2)	-	1010 (39.8)

* Some peripheral equipment can be placed in other places

External Dimensions

PUMA 3100

Unit : mm (inch)

Top view

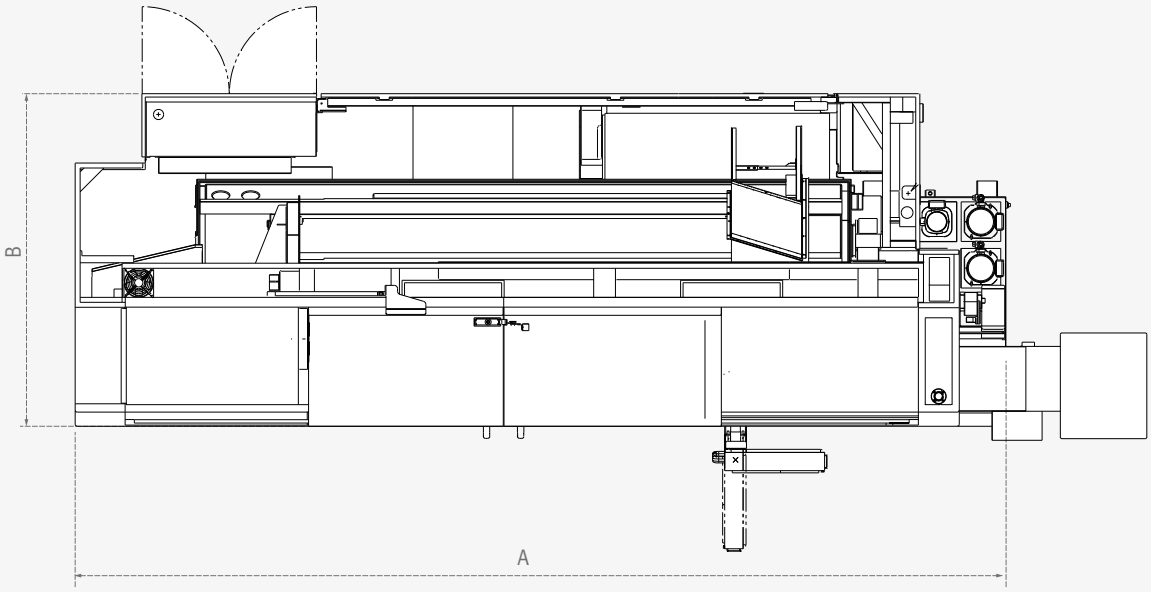

Front view

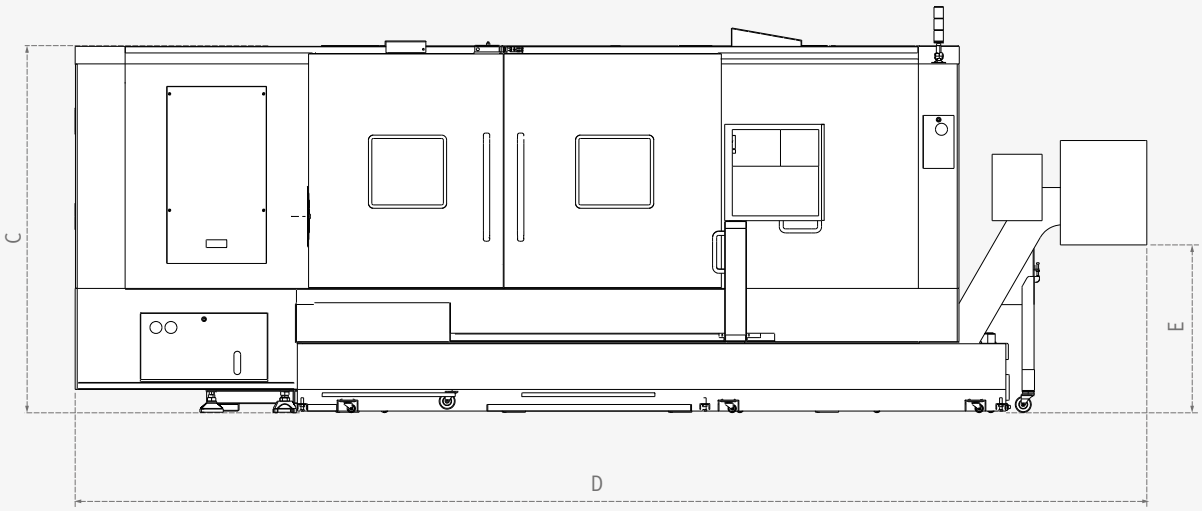

Model	A (Length)	B (Width)	C (Height)	D (Length with side chip conveyor)	E (Height of ground to chip outlet)
PUMA 3100	3908 (153.9)	1978 (77.9)	2010 [2315] (79.1 [91.1])	4819 (189.7)	1010 (39.8)
PUMA 3100L	4527 (178.2)	2067 (81.4)	2010 [2315] (79.1 [91.1])	5599 (220.4)	1010 (39.8)
PUMA 3100XL	5615 (221.1)	2280 (89.8)	2315 (91.1)	6443 (253.7)	1010 (39.8)
PUMA 3100UL	6585 (259.3)	2280 (89.8)	2315 (91.1)	7670 (302.0)	1010 (39.8)
PUMA 3100XLYB	5857 (230.6)	2280 (89.8)	2315 (91.1)	6685 (263.2)	1010 (39.8)
PUmA 3100ULYB	6827(268.8)	2280 (89.8)	2315 (91.1)	7912 (311.5)	1010 (39.8)

* Some peripheral equipment can be placed in other places

Tooling System

PUMA 2100 / 2100L / 2600 / 2600L

Unit : mm (inch)

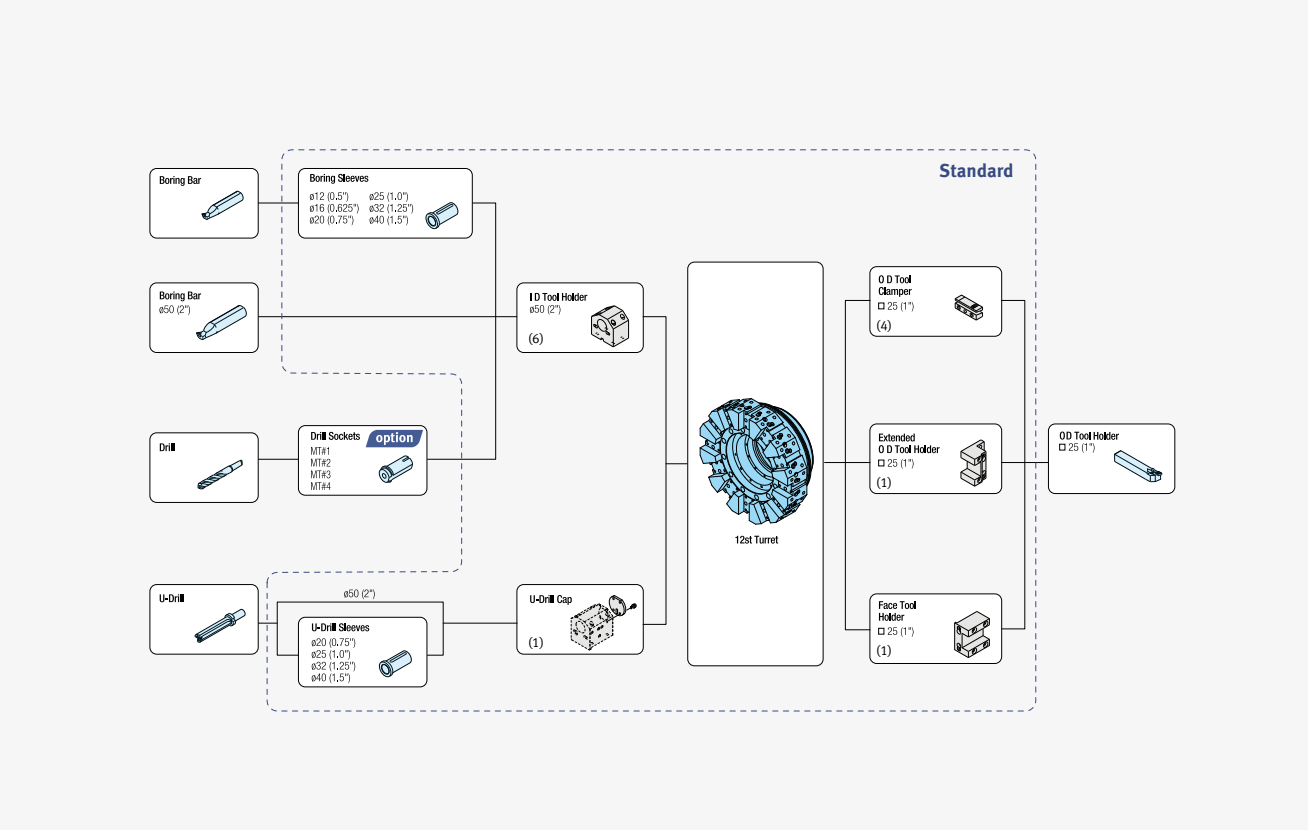

PUMA 2100S / 2100LS / 2600S / 2600LS

Unit : mm (inch)

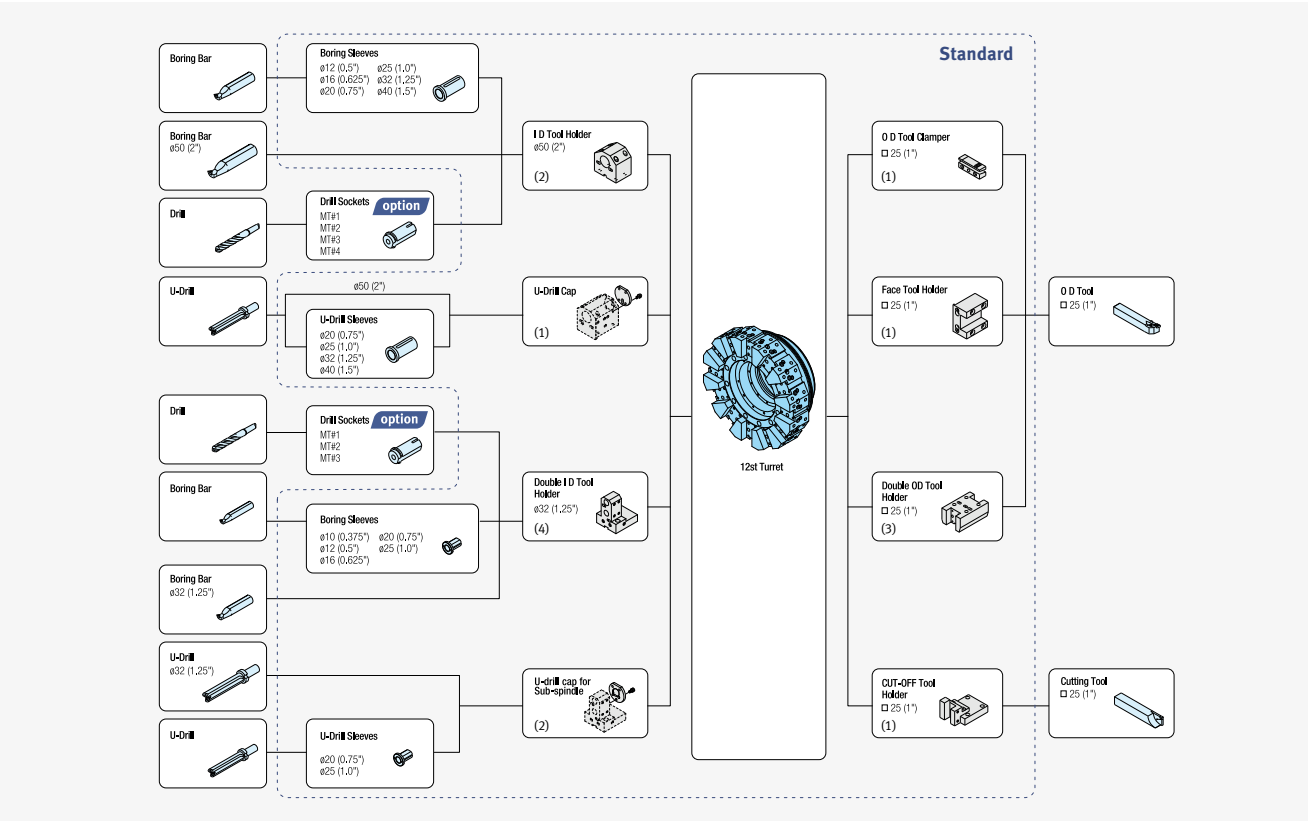

PUMA 2100M / 2100LM / 2100Y / 2100LY (12 station-BMT55P)

Unit : mm (inch)

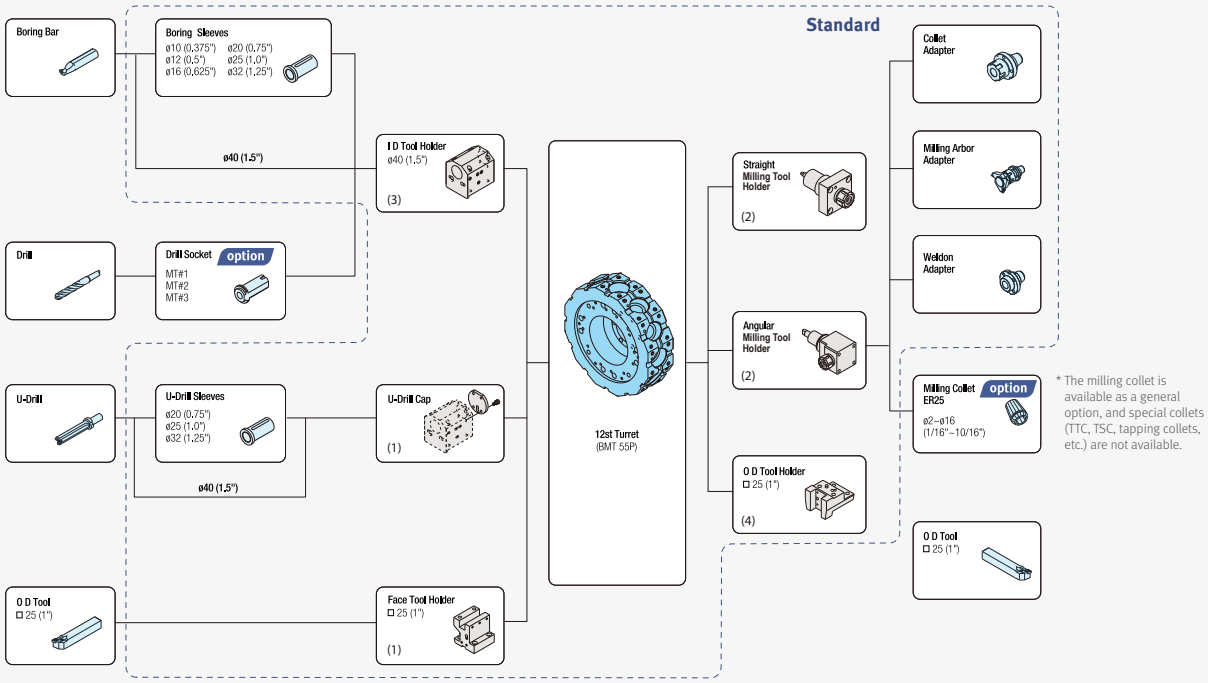

* The milling collet is available as a general option, and special collets (TTC, TSC, tapping collets, etc.) are not available.

PUMA 2100M / 2100LM / 2100Y / 2100LY (24 station. - BMT55P) option

Unit : mm (inch)

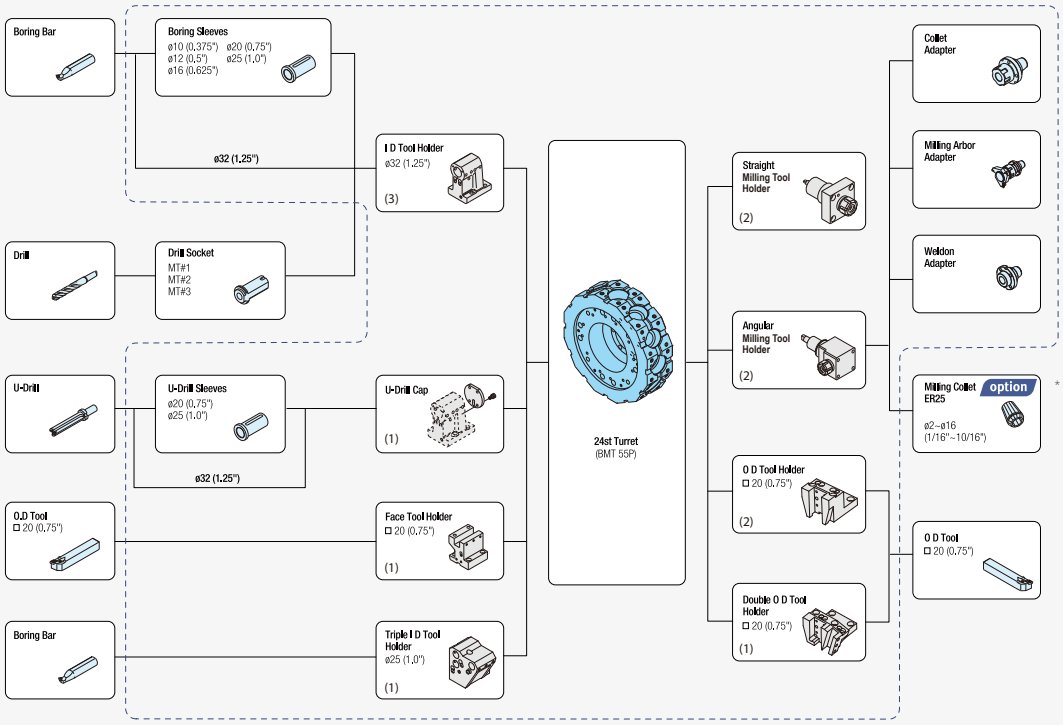

* The milling collet is available as a general option, and special collets (TTC, TSC, tapping collets, etc.) are not available.

Tooling System

PUMA 2100MS / 2100LMS / 2100SY / 2100LSY (12 station-BMT55P)

Unit : mm (inch)

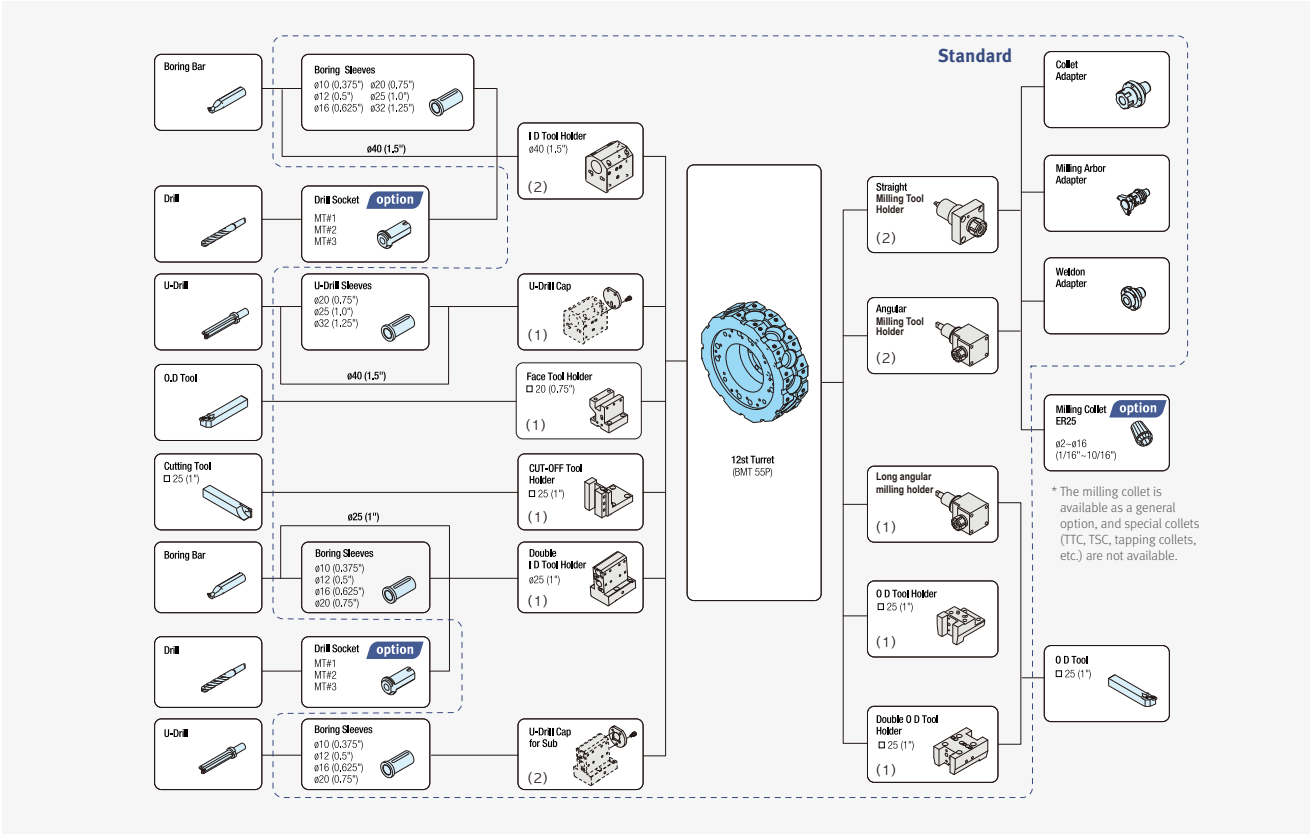

PUMA 2100MS / 2100LMS / 2100SY / 2100LSY (24 station. - BMT55P) option

Unit : mm (inch)

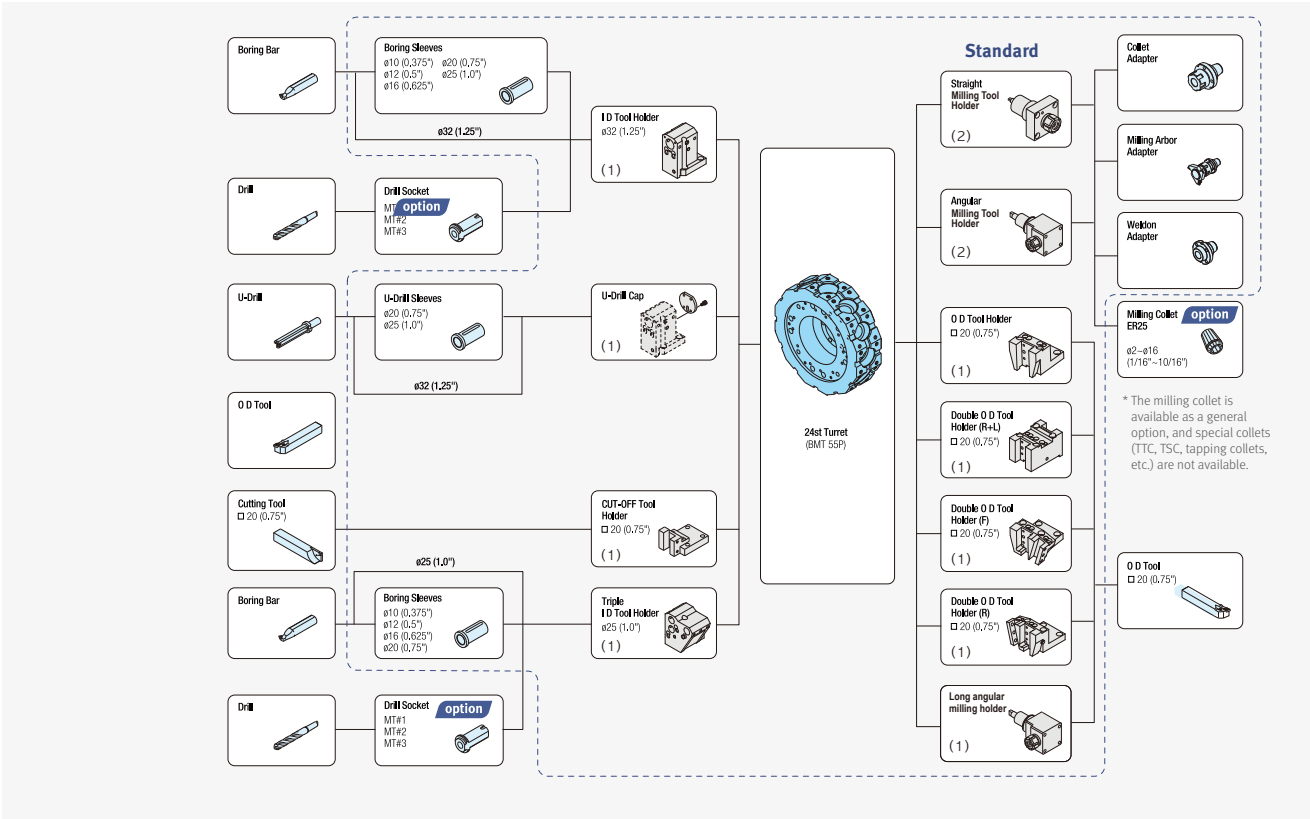

PUMA 2600M / 2600LM / 2600Y / 2600LY (12 station-BMT65P)

Unit : mm (inch)

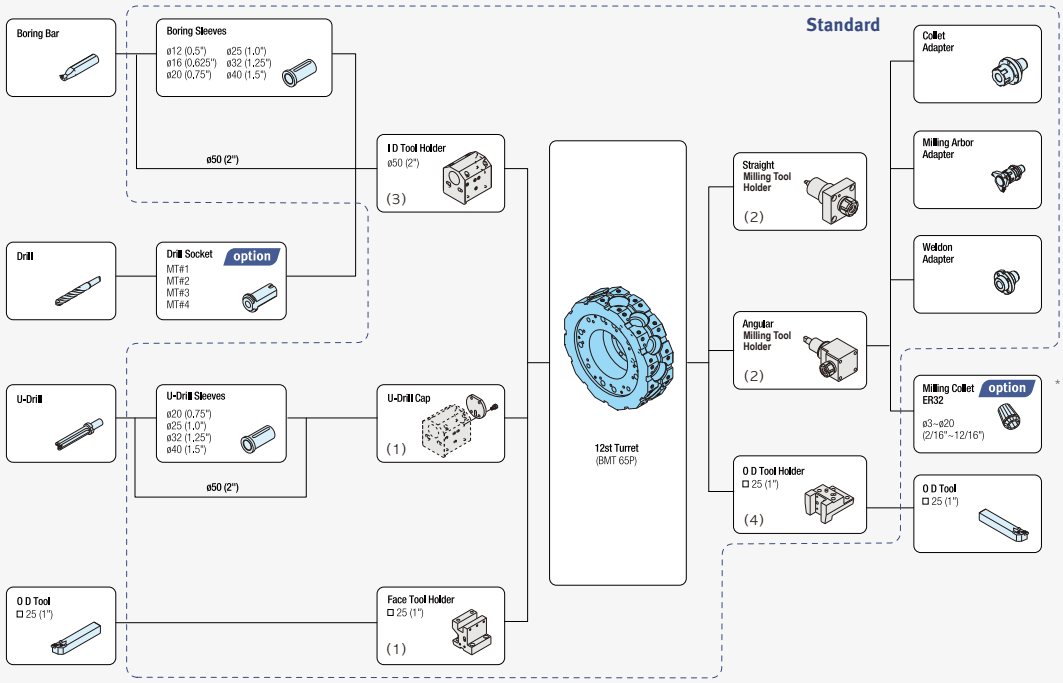

* The milling collet is available as a general option, and special collets (TTC, TSC, tapping collets, etc.) are not available.

PUMA 2600M / 2600LM / 2600Y / 2600LY (24 station. - BMT65P) option

Unit : mm (inch)

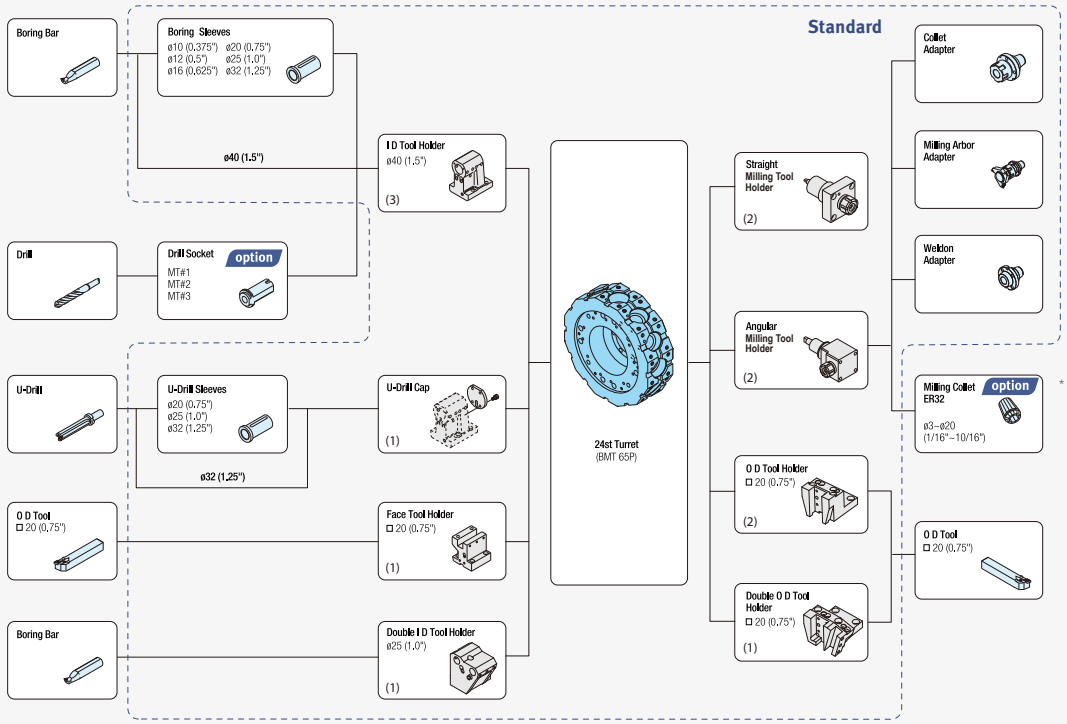

* The milling collet is available as a general option, and special collets (TTC, TSC, tapping collets, etc.) are not available.

Tooling System

PUMA 2600MS / 2600LMS / 2600SY / 2600LSY (12 station-BMT65P)

Unit : mm (inch)

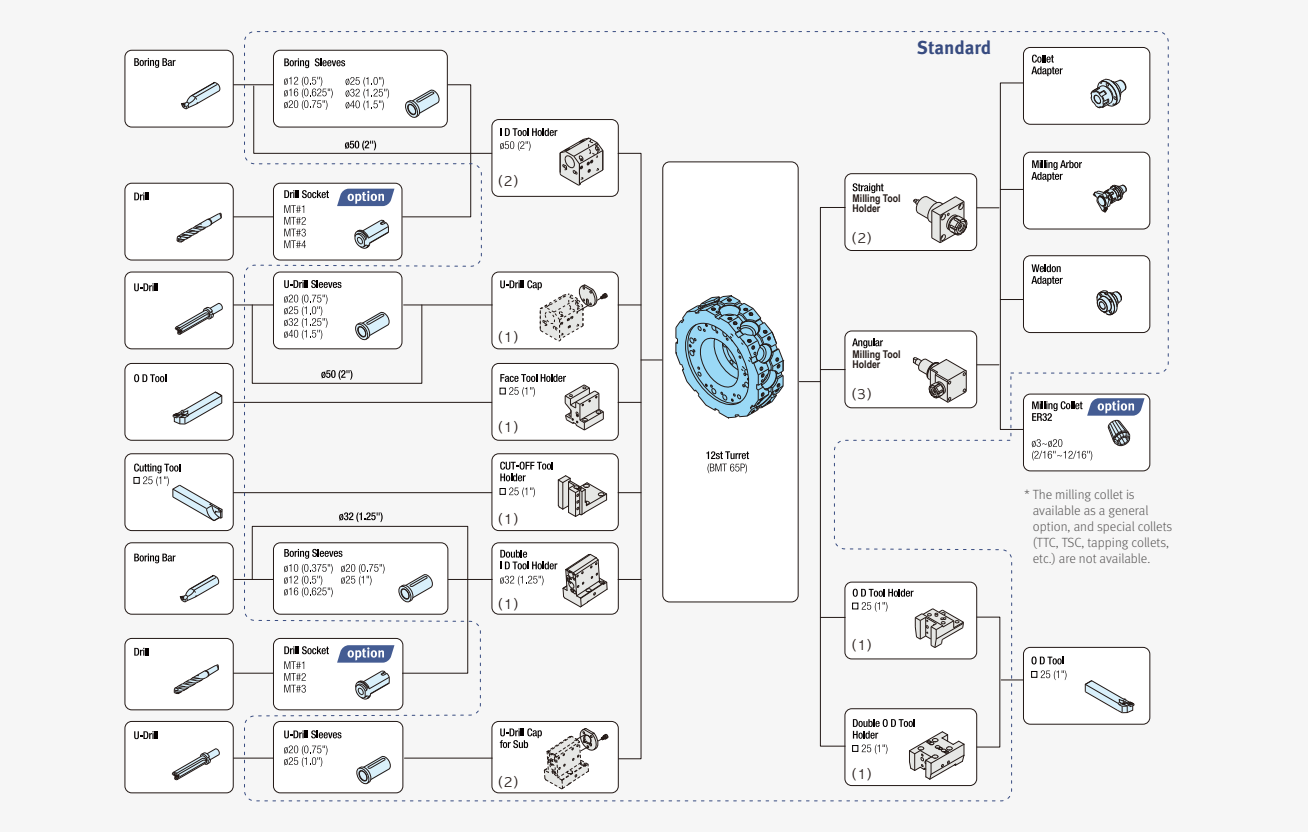

PUMA 2600MS / 2600LMS / 2600SY / 2600LSY (24 station. - BMT65P) option

Unit : mm (inch)

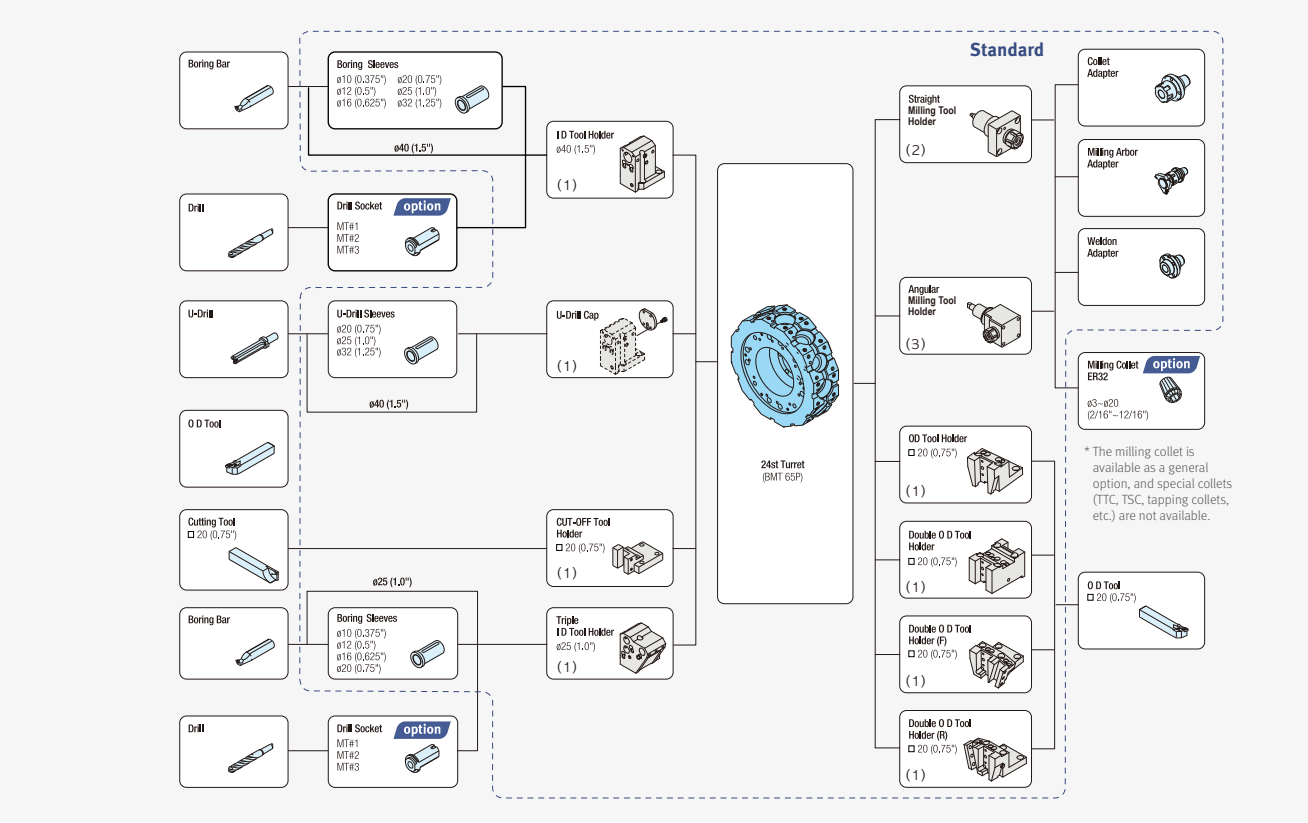

PUMA 3100 / 3100L / 3100XL / 3100UL

Unit : mm (inch)

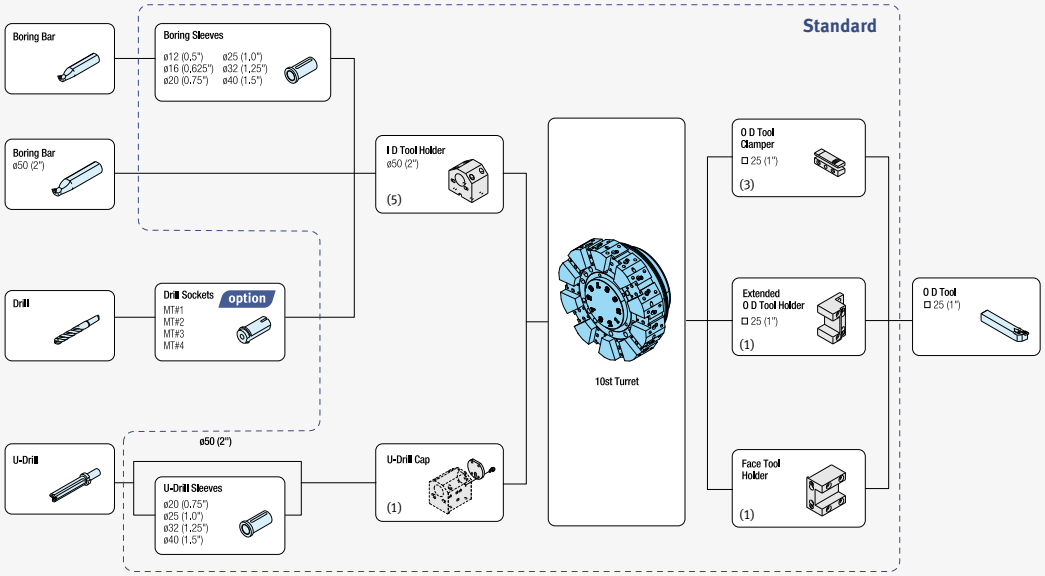

PUMA 3100M / 3100LM / 3100XLM / 3100ULM / 3100Y / 3100LY /3100 XLY / 3100ULY

(12 station-BMT65P)

Unit : mm (inch)

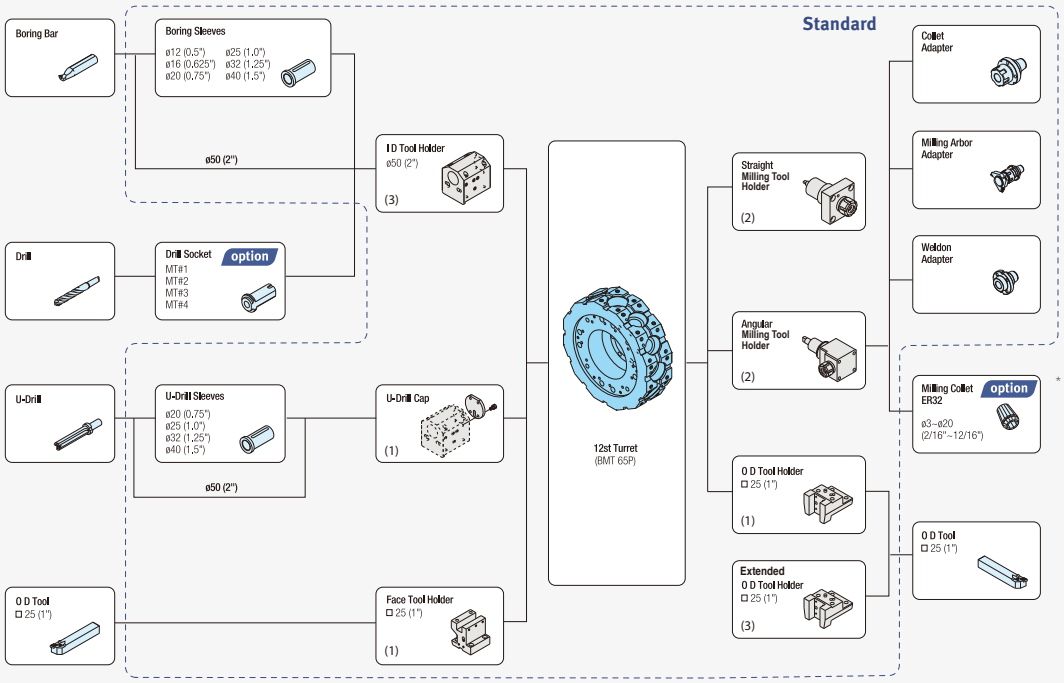

* The milling collet is available as a general option, and special collets (TTC, TSC, tapping collets, etc.) are not available.

Tool Interference Diagram

PUMA 2100 / 2100L / 2600 / 2600L

(12 station)

Unit : mm (inch)

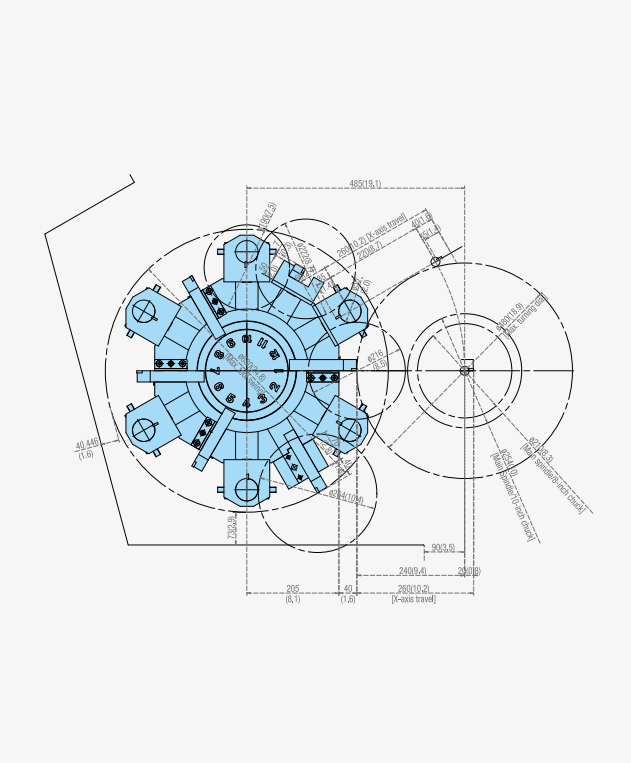

PUMA 2100S / 2100LS / 2600S 2600LS

(12 station)

Unit : mm (inch)

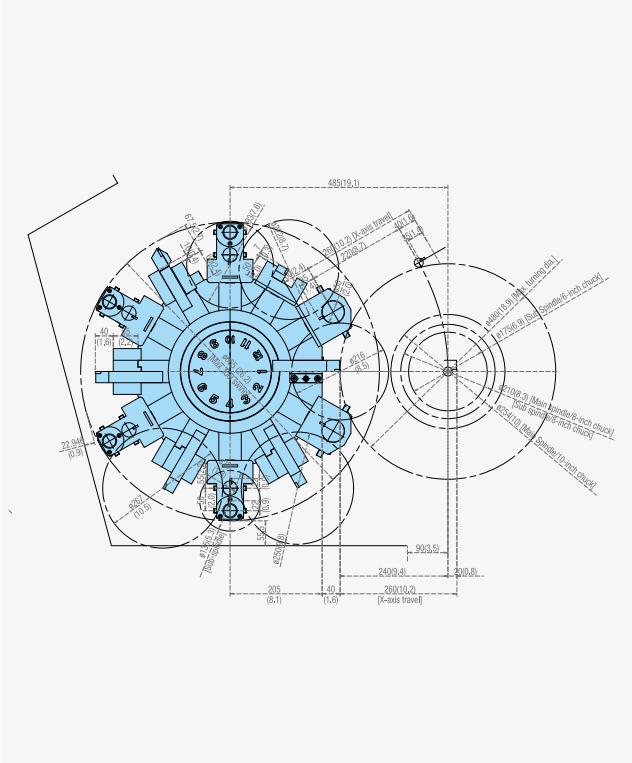

PUMA 2100M / 2100LM

(12 station-BMT55P)

Unit : mm (inch)

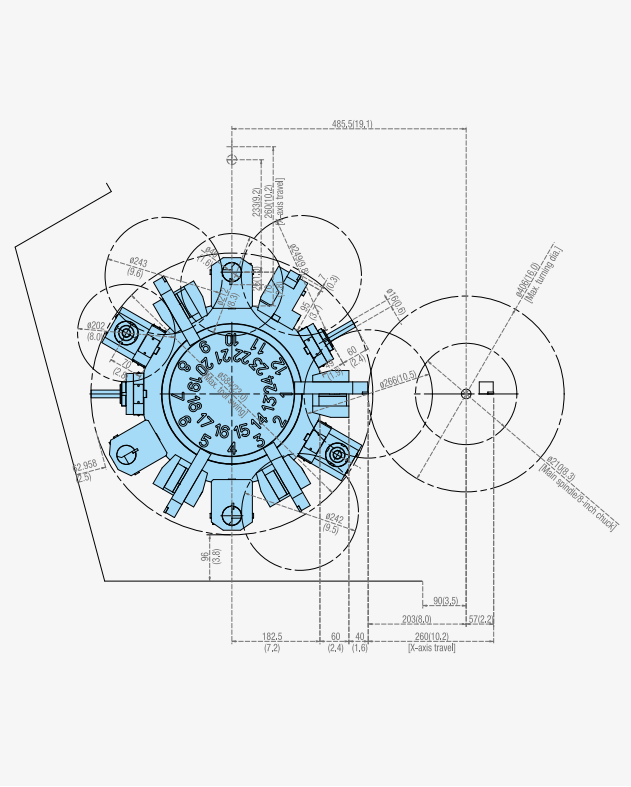

PUMA 2100MS / 2100LMS

(12 station-BMT55P)

Unit : mm (inch)

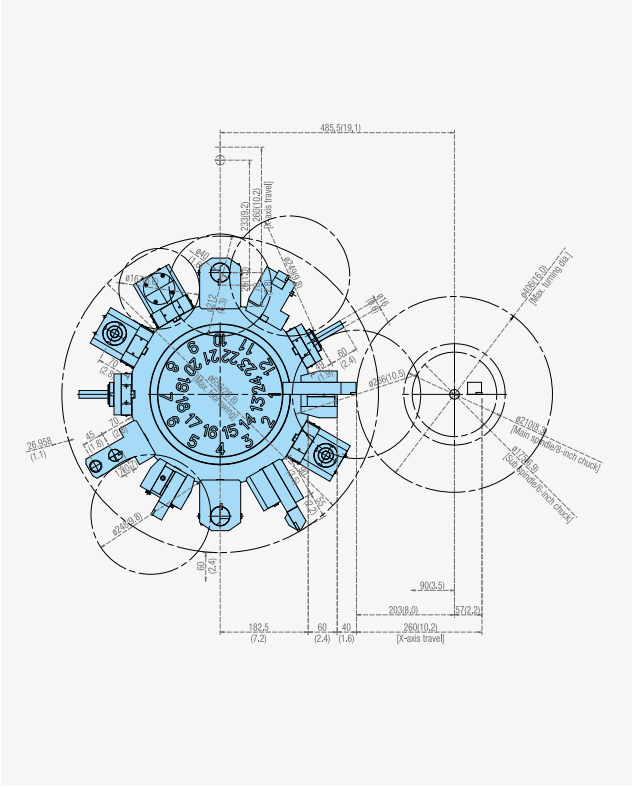

PUMA 2100M / 2100LM / 2600M / 2600LM

(12 station-BMT65P)

Unit : mm (inch)

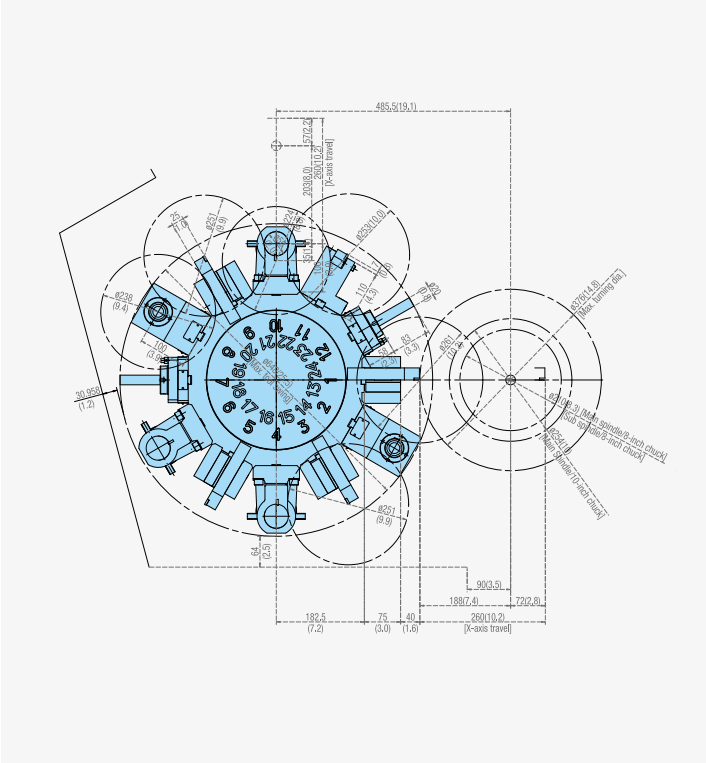

PUMA 2100MS / 2100LMS / 2600MS / 2600LMS

(12 station-BMT65P)

Unit : mm (inch)

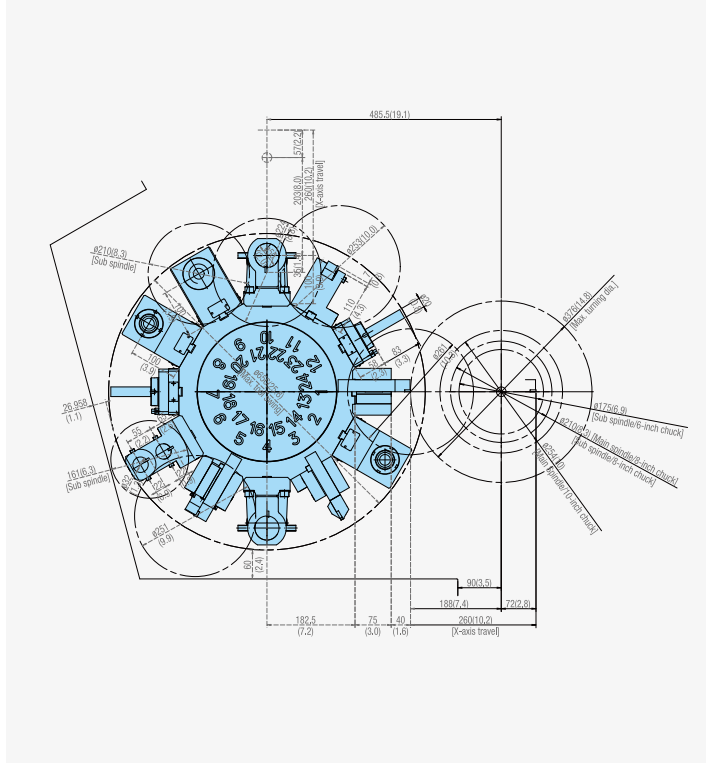

PUMA 2100M / 2100LM

(12 station- BMT55P)

Unit : mm (inch)

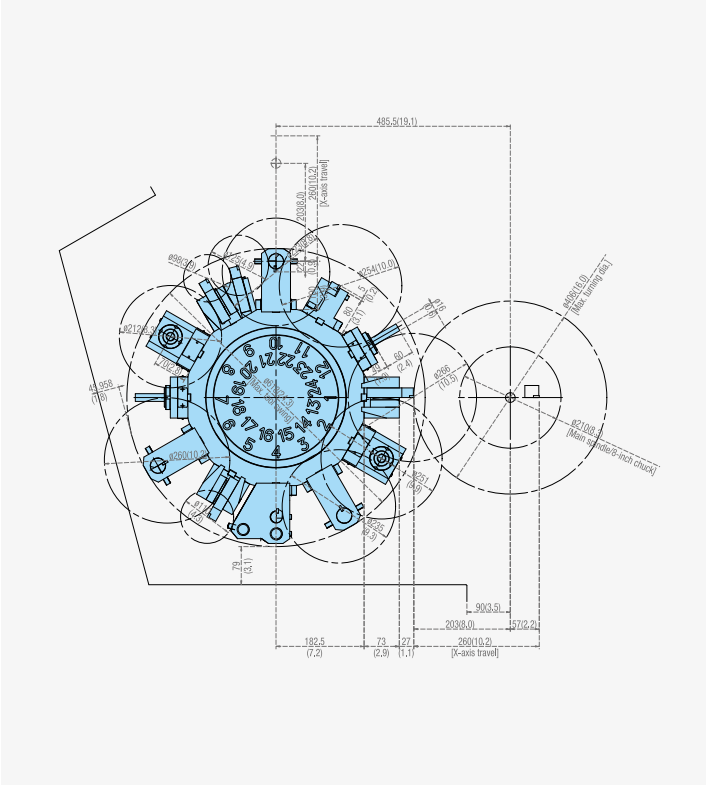

PUMA 2100MS / 2100LMS

(12 station- BMT55P)

Unit : mm (inch)

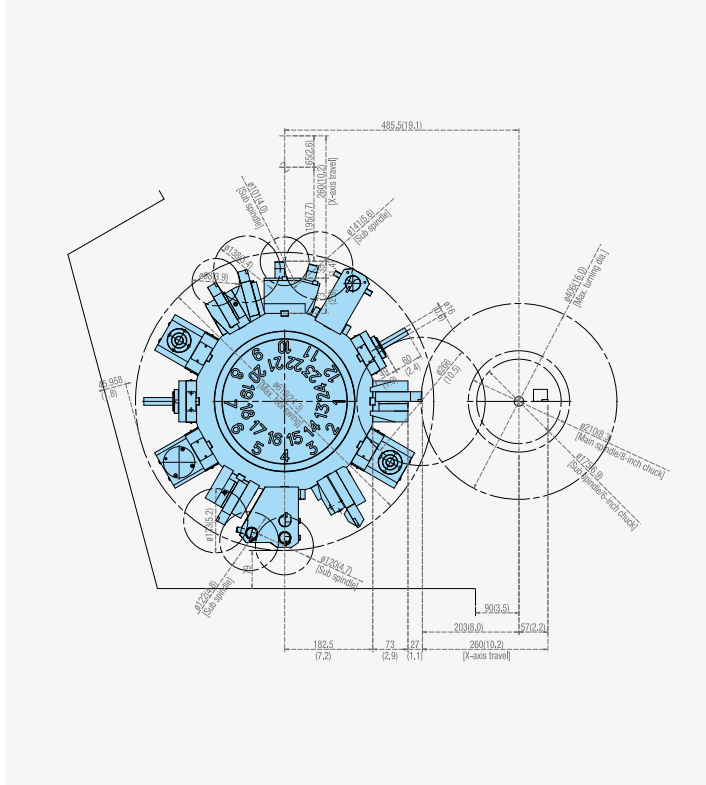

Tool Interference Diagram

PUMA 2100M / 2100LM / 2600M / 2600LM
(24 station-BMT65P)

Unit : mm (inch)

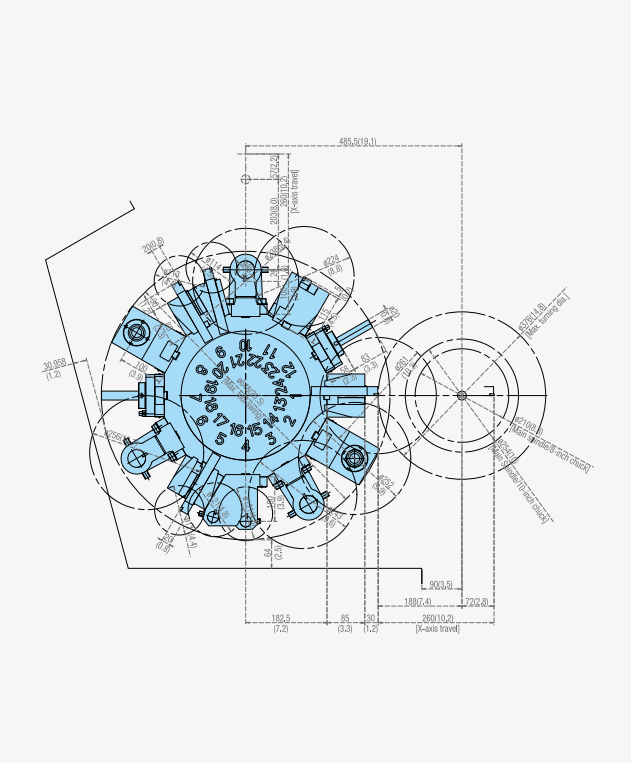

PUMA 2100MS / 2100LMS / 2600MS / 2600LMS (24 station-BMT65P)

Unit : mm (inch)

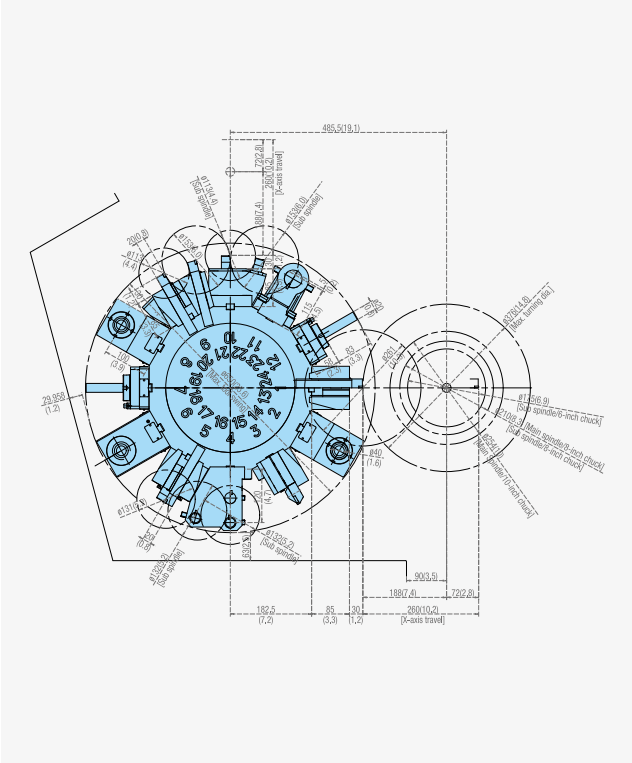

PUMA 2100SY / 2100LSY
(12 station-BMT55P)

Unit : mm (inch)

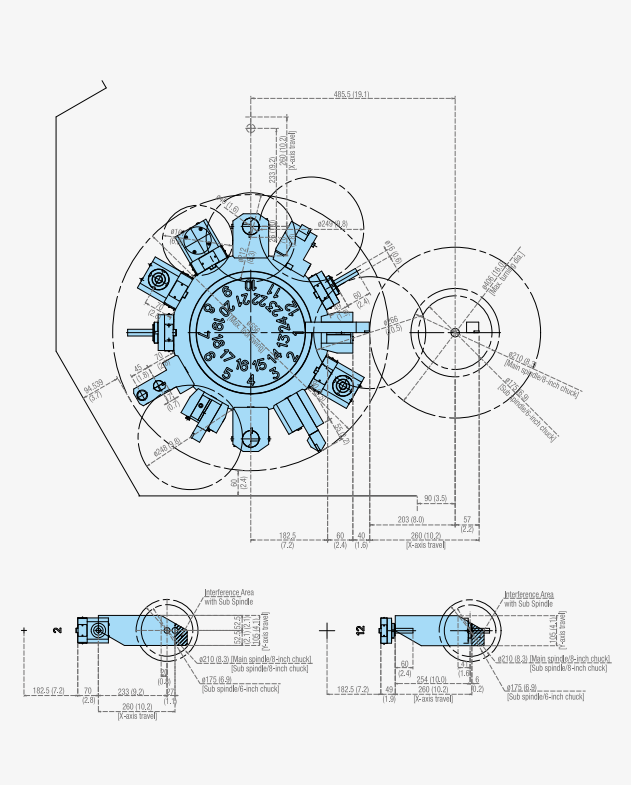

PUMA 2100Y / 2100LY
(12 station-BMT55P)

Unit : mm (inch)

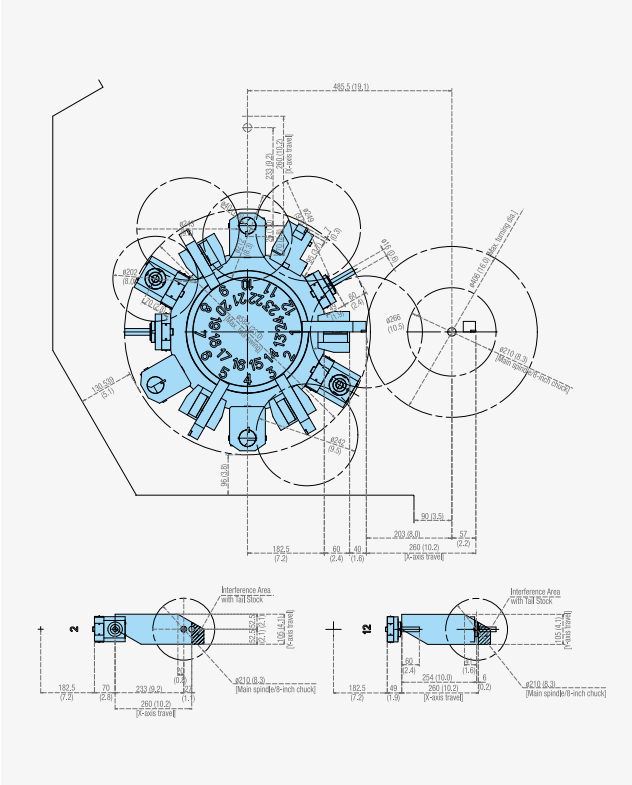

PUMA 2100SY / 2100LSY / 2600SY / 2600LSY

(12 station-BMT65P)

Unit : mm (inch)

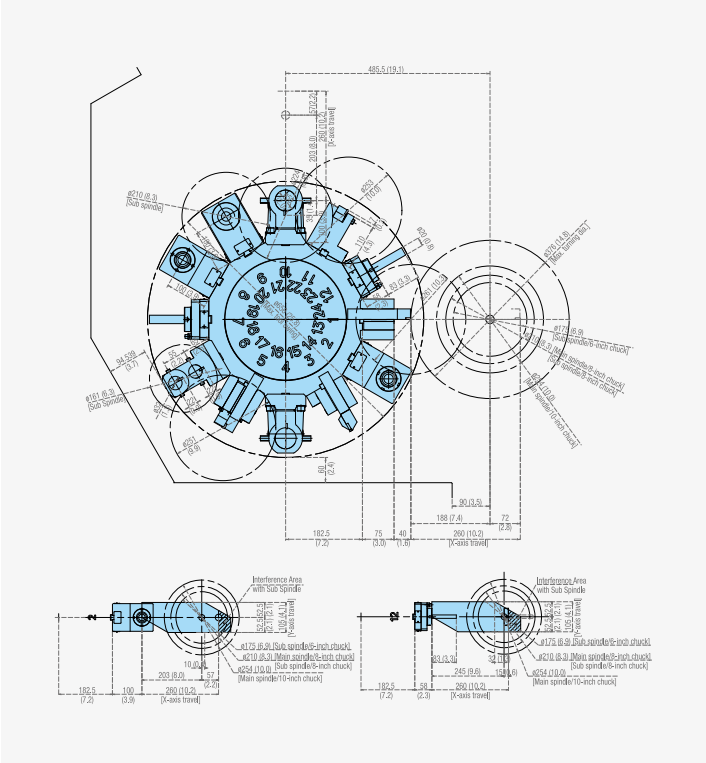

PUMA 2100Y / 2100LY / 2600Y / 2600LY

(12 station-BMT65P)

Unit : mm (inch)

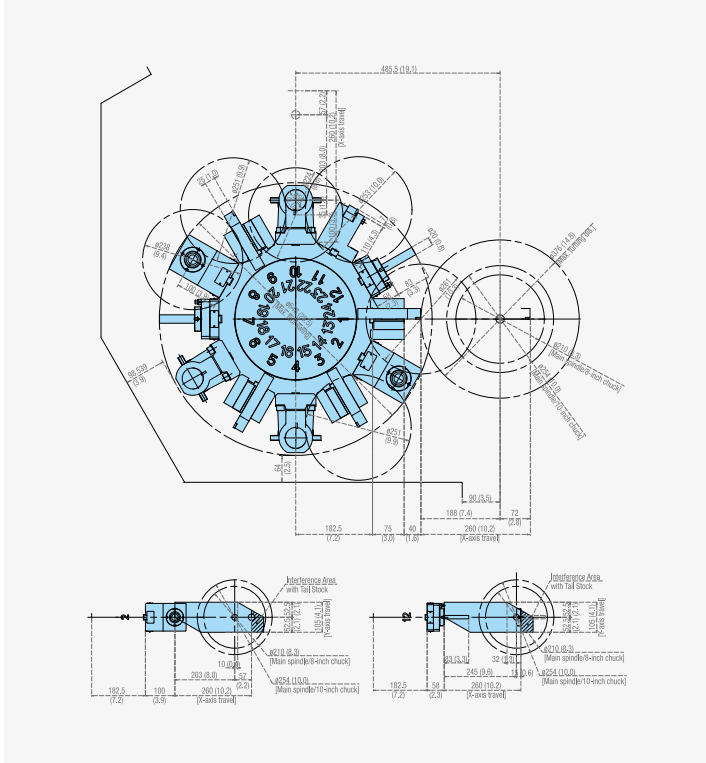

PUMA 2100SY / 2100LSY

(24 station-BMT55P)

Unit : mm (inch)

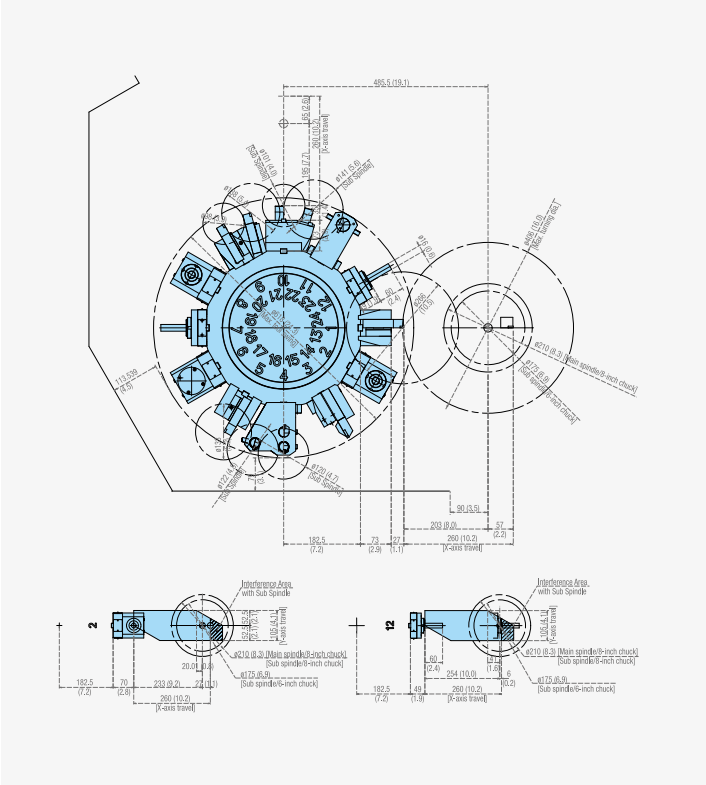

PUMA 2100Y / 2100LY

(24 station-BMT55P)

Unit : mm (inch)

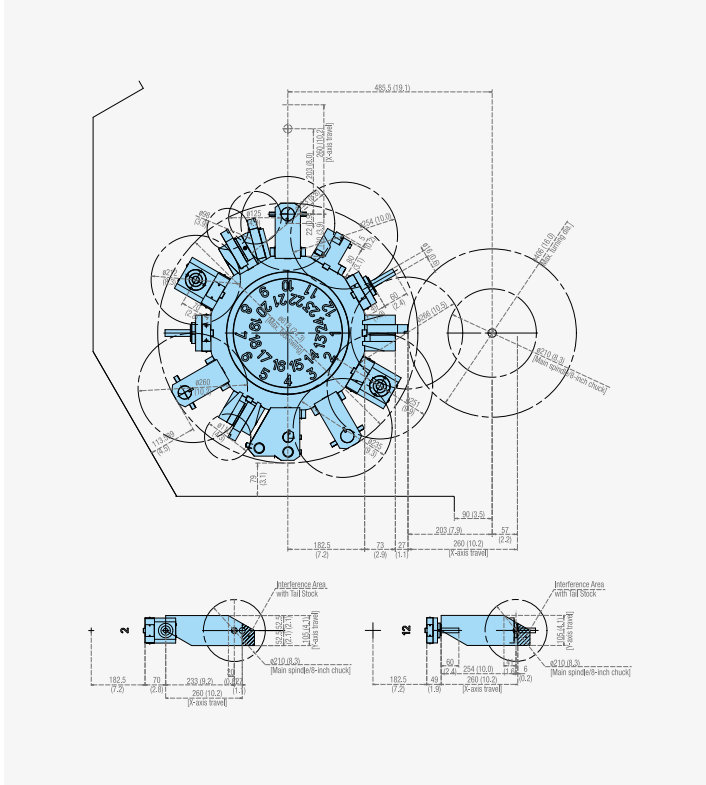

Tool Interference Diagram

PUMA 2100SY / 2100LSY / 2600SY / 2600LSY

(24 station-BMT65P)

Unit : mm (inch)

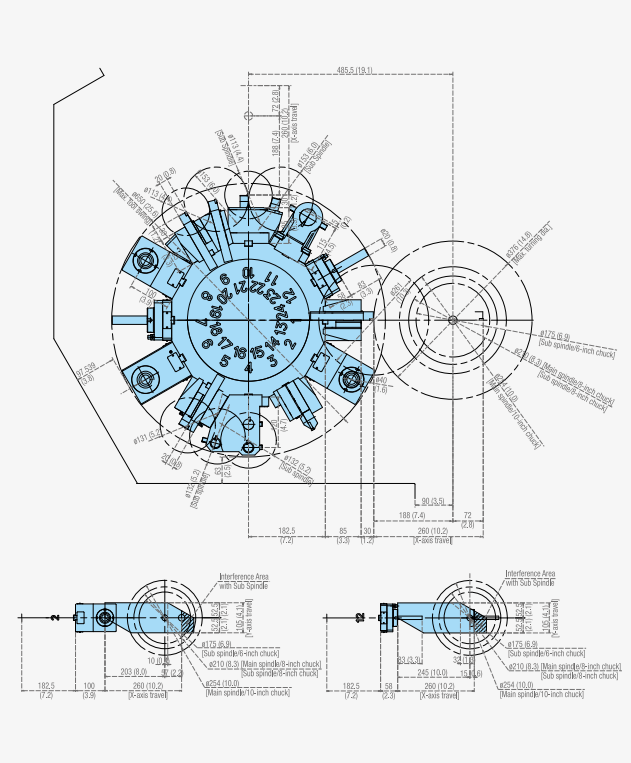

PUMA 2100Y / 2100LY / 2600Y / 2600LY

(24 station-BMT65P)

Unit : mm (inch)

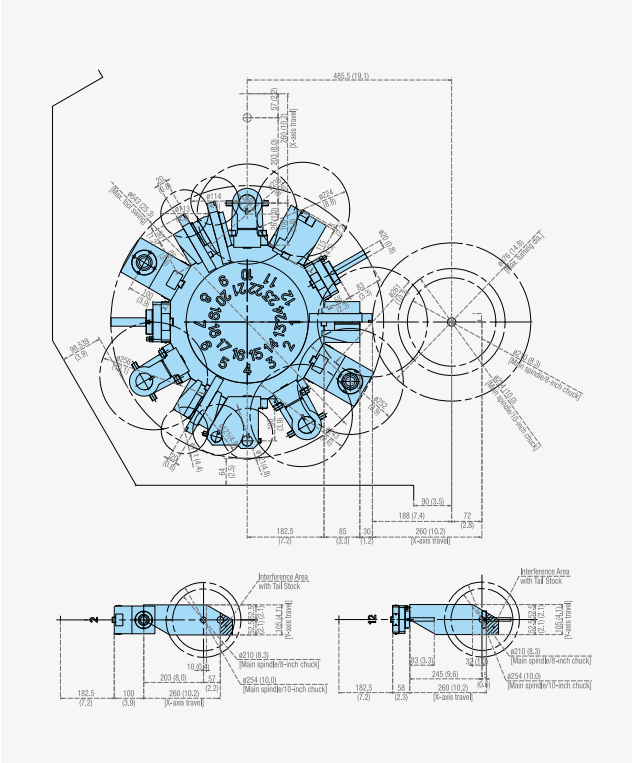

PUMA 3100 / 3100L

(10 station)

Unit : mm (inch)

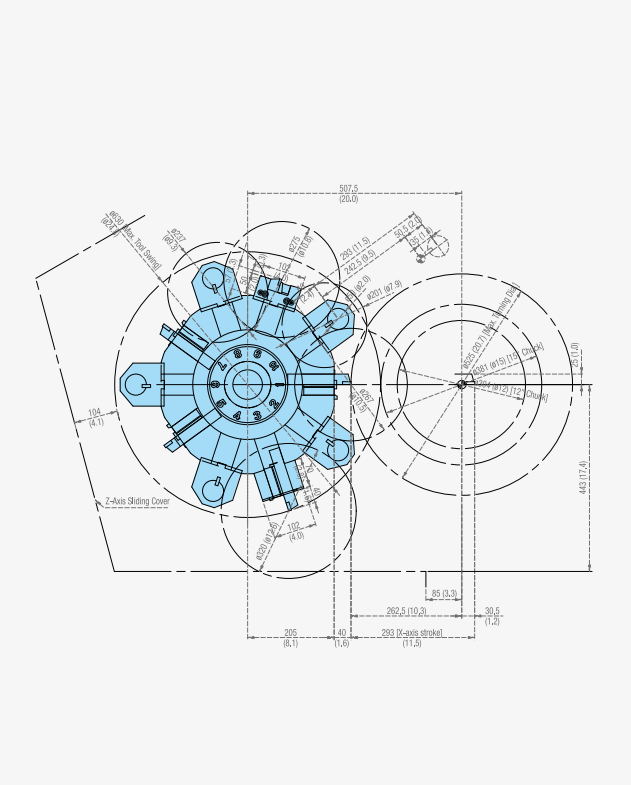

PUMA 3100XL / 3100UL

(10 station)

Unit : mm (inch)

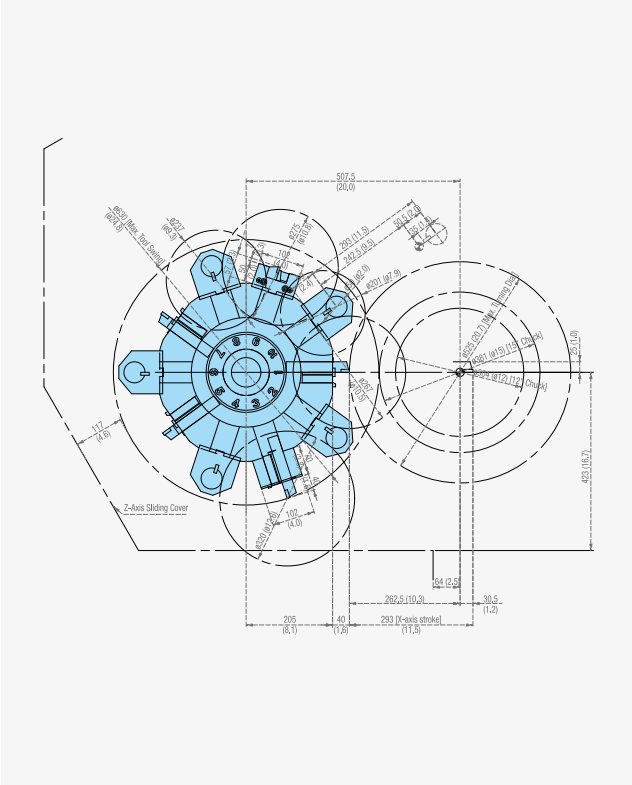

PUMA 3100M / 3100LM / 3100Y / 3100LY

(12 station-BMT65P)

Unit : mm (inch)

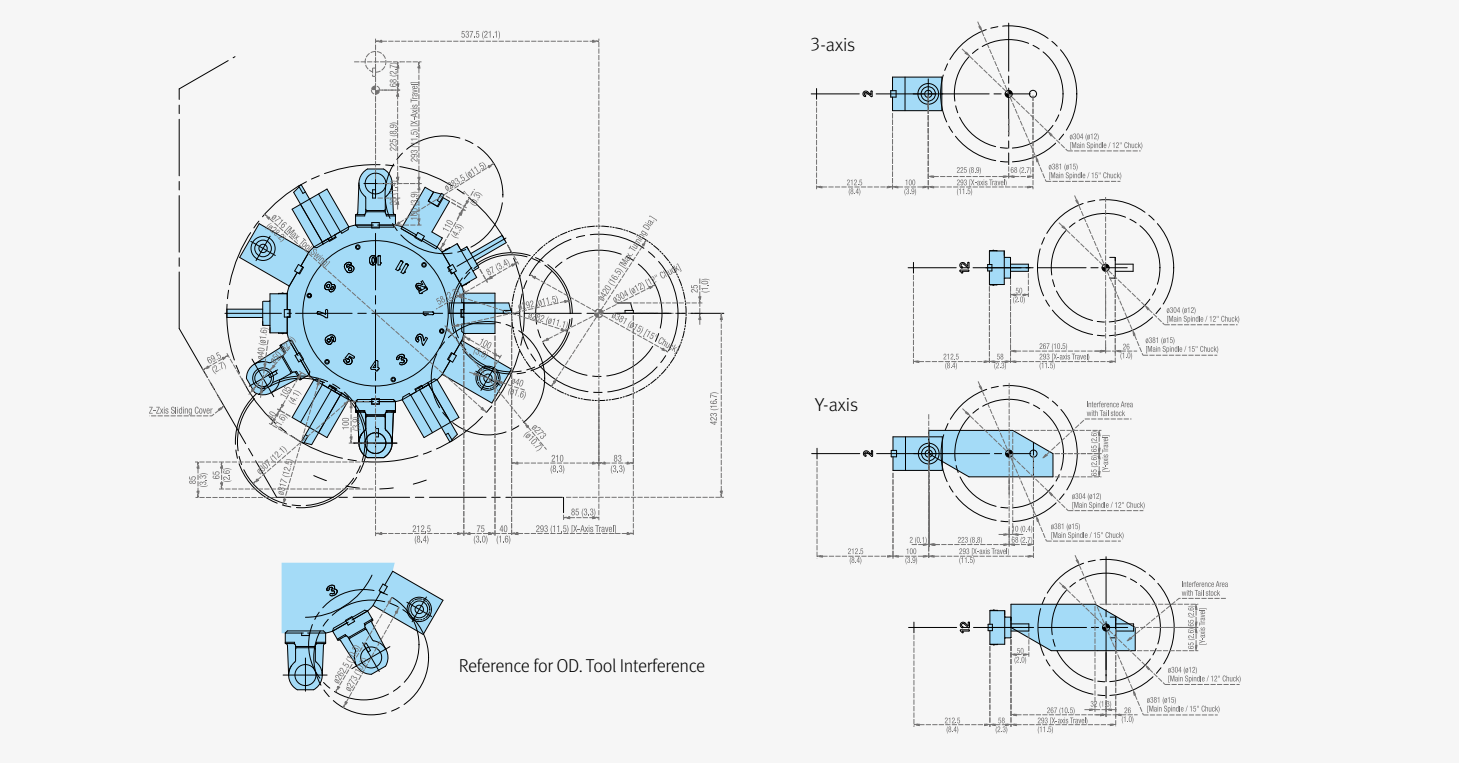

PUMA 3100XLM / 3100ULM / 3100 XLY / 3100ULY

(24 station-BMT65P)

Unit : mm (inch)

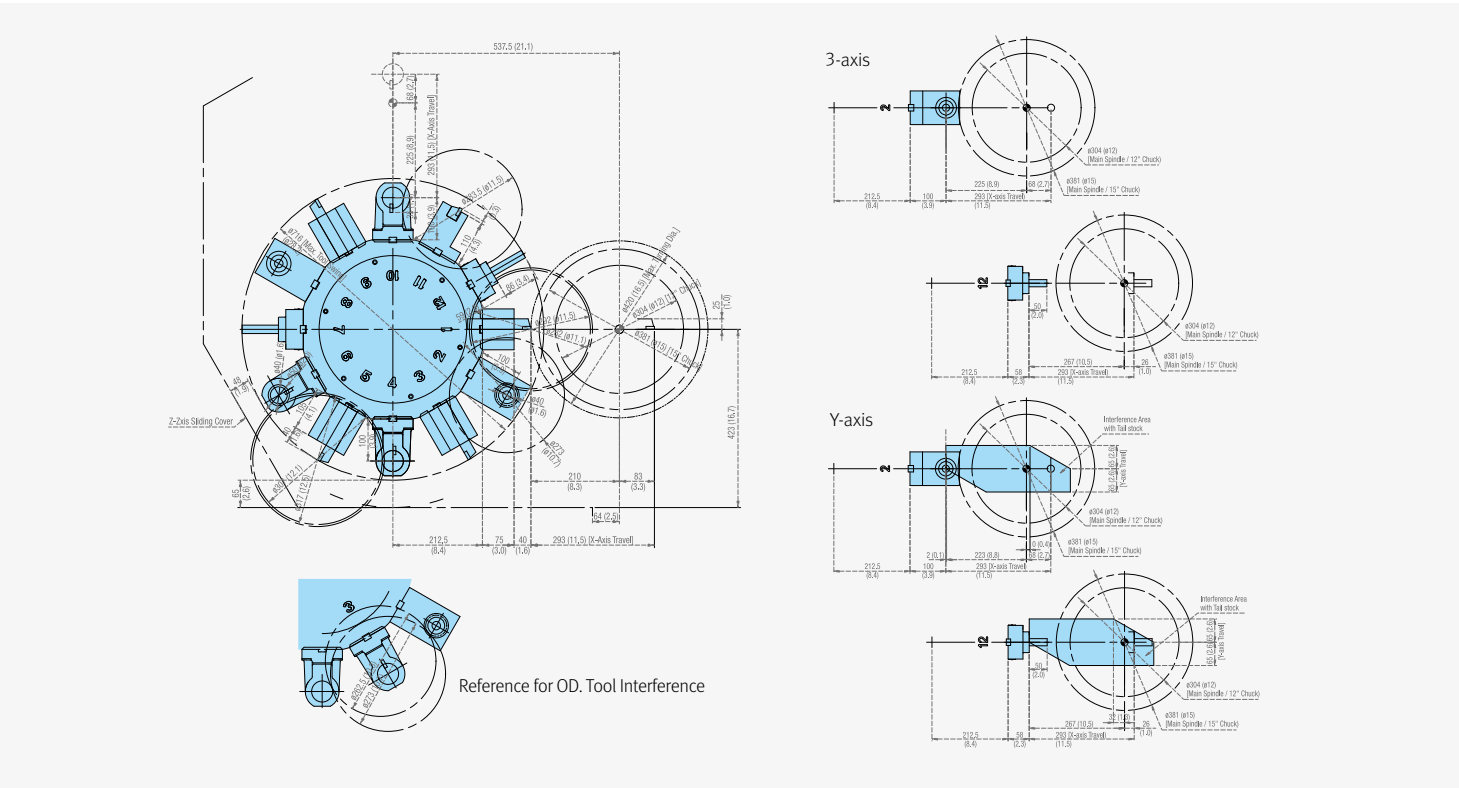

Machine Specifications

PUMA 2100 series

Description			Unit	PUMA 2100/L	PUMA 2100M/LM	PUMA 2100MS/LMS
Capacity	Swing over bed		mm (inch)	780 (30.7)		
	Swing over front door		mm (inch)	630 (24.8)		
	Swing over saddle*		mm (inch)	680 (26.8)		
	Recom. Turning diameter		mm (inch)	210 (8.3)		
	Max. turning diameter		mm (inch)	481 (18.9)	406 (16.0)	
	Max. turning length		mm (inch)	545 / 785 (21.5 / 30.9)	520 / 760 (20.5 / 29.9)	
	Bar working diameter		mm (inch)	65 (2.6)		
Travels	Travel distance	X-axis	mm (inch)	260 (10.2)		
		Z-axis	mm (inch)	590 / 830 (23.2 / 32.7)		
		Y-axis	mm (inch)	-		
		B-axis	mm (inch)	-		590 / 830 (23.2 / 32.7)
Feedrates	Rapid traverse	X-axis	m/min (ipm)	30 (1181.1)		
		Z-axis	m/min (ipm)	30 (1181.1)		
		Y-axis	m/min (ipm)	-		
		B-axis	m/min (ipm)	-		30 (1181.1)
Spindle	Spindle speed (Belt Type)		r/min	4500		
	Spindle speed (Built-in Type)		r/min	-		
	Spindle nose			ASA A2#6		
	Spindle bearing diameter (Front)		mm (inch)	120 (4.7)		
	Spindle through hole diameter		mm (inch)	76 (3.0)		
	Min. spindle indexing angle (C-axis)		deg	-	0.001	
Turret	No. of tool stations		st	12	12 {24}*	
	OD tool size		mm (inch)	25 (1.0)	25 {20}* (1.0 {0.8})	
	Boring bar diameter		mm (inch)	50 (2.0)	40 {32}* (1.6 {1.3})	
	Indexing time (1st swivel time)		s	0.15		
	Rotary tool spindle speed		r/min	-	5000	
Tail stock	Quill diameter		mm (inch)	80 (3.1)		-
	Quill bore taper (Live)			MT#4		-
	Compressed air supply		mm (inch)	80 (3.1)		-
Sub-spindle	Spindle speed (Belt [Built-in])		r/min	-		4500
	Spindle nose			-		ASA A2-5
	Spindle bearing diameter (Front)		mm (inch)	-		90 (3.5)
	Spindle through hole diameter		mm (inch)	-		62 (2.4)
	Min. spindle indexing angle (C-axis)		deg	-		0.001
Motors	Main spindle motor		kW (Hp)	25 / 18.5 /15 (33.5 / 24.8 / 20.1) (S6 25% / S6 60% / S1 Cont.)		
	Sub spindle motor		kW (Hp)	-		7.5 / 5.5 (10 / 7)
	Rotary tool spindle motor		kW (Hp)	-		5.5 (7)
	Coolant pump motor		kW (Hp)	0.4 (0)		
Power source	Electric power supply (Rated capacity)		kVA	32.78	33.7	46.56
Machine size	Machine height		mm (inch)	1900 (74.8)		
	Machine dimension	length	mm (inch)	3330 / 3530 (131.1 / 139.0)		
		width	mm (inch)	1863 (73.3)		
	Machine weight		kg (lb)	4850 / 5350 (10692.3 / 11794.6)	5000 / 5500 (11023.0 / 12125.2)	5450 / 5950 (12015.0 / 13117.3)

*{ }: Option

* The specifications and information above-ntioned may be changed without prior notice.
⁎ For more details, please contact DN Solutions.

Machine Specifications

PUMA 2100 / 2600 series

Description			Unit	PUMA 2100Y/LY	PUMA 2100SY/LSY	PUMA 2600/L	PUMA 2600M/LM
Capacity	Swing over bed		mm (inch)	780 (30.7)			
	Swing over front door		mm (inch)	630 (24.8)			
	Swing over saddle*		mm (inch)	680 (26.8)			
	Recom. Turning diameter		mm (inch)	210 (8.3)		255 (10.0)	
	Max. turning diameter		mm (inch)	406 (16.0)		481 (18.9)	376 (14.8)
	Max. turning length		mm (inch)	520 / 760 (20.5 / 29.9)		790 / 1310 (31.1 / 51.6)	760 / 1280 (29.9 / 50.4)
	Bar working diameter		mm (inch)	65 (2.6)		76 (3.0)	
Travels	Travel distance	X-axis	mm (inch)	260 (10.2)			
		Z-axis	mm (inch)	590 / 830 (23.2 / 32.7)		830 / 1350 (32.7 / 53.1)	
		Y-axis	mm (inch)	105 (4.1)		-	
		B-axis	mm (inch)	-	590 / 830 (23.2 / 32.7)	-	
Feedrates	Rapid traverse	X-axis	m/min (ipm)	30 (1181.1)			
		Z-axis	m/min (ipm)	30 (1181.1)			
		Y-axis	m/min (ipm)	10 (393.7)		-	
		B-axis	m/min (ipm)	-	30 (1181.1)	-	
Spindle	Spindle speed (Belt Type)		r/min	4500		3500	
	Spindle speed (Built-in Type)		r/min	PUMA 2100Y II series		-	
	Spindle nose			ASA A2#6		ASA A2#8	
	Spindle bearing diameter (Front)		mm (inch)	120 (4.7)		140 (5.5)	
	Spindle through hole diameter		mm (inch)	76 (3.0)		86 (3.4)	
	Min. spindle indexing angle (C-axis)		deg	0.001		-	0.001
Turret	No. of tool stations		st	12 {24} {16}*		12	12 {24}*
	OD tool size		mm (inch)	25 {20} {25} (1.0 {0.8} {1.0})*		25 (1.0)	25 {20} (1.0 {0.8})*
	Boring bar diameter		mm (inch)	40 {32} {32} (1.6 {1.3} {1.3})*		50 (2.0)	50 {40} (2.0 {1.6})*
	Indexing time (1st swivel time)		s	0.15			
	Rotary tool spindle speed		r/min	5000		-	5000
Tail stock	Quill diameter		mm (inch)	80 (3.1)	-	100 (3.9)	
	Quill bore taper (Live)			MT#4	-	MT#5	
	Compressed air supply		mm (inch)	80 (3.1)	-	100 (3.9)	
Sub-spindle	Spindle speed (Belt [Built-in])		r/min	-	4500 [PUMA 2100SY II /LSY II]	-	
	Spindle nose			-	ASA A2-5	-	
	Spindle bearing diameter (Front)		mm (inch)	-	90	-	
	Spindle through hole diameter		mm (inch)	-	62	-	
	Min. spindle indexing angle (C-axis)		deg	-	0.001	-	
Motors	Main spindle motor		kW (Hp)	25 / 18.5 /15 (33.5 / 24.8 / 20.1) (S6 25% / S6 60% / S1 Cont.)		30 / 22 / 18.5 (40.2 / 29.5 / 24.8) (S6 25% / S6 60% / S1 Cont.)	
	Sub spindle motor		kW (Hp)	-	7.5 / 5.5 (10 / 7)	-	
	Rotary tool spindle motor		kW (Hp)	5.5 (7)		-	
	Coolant pump motor		kW (Hp)	0.4 (0)			
Power source	Electric power supply (Rated capacity)		kVA	41.32	48.54	40.72	44.42
Machine size	Machine height		mm (inch)	2163 (85.2)		1900 (74.8)	
	Machine dimension	length	mm (inch)	3330 / 3530 (131.1 / 139.0)		3650 / 4335 (143.7 / 170.7)	
		width	mm (inch)	1863 (73.3)		1863 / 1965 (73.3 / 77.4)	
	Machine weight		kg (lb)	5450 / 5950 (12015.0 / 13117.3)	5900 / 6400 (13007.1 / 14109.4)	5400 / 6700 (11904.8 / 14770.8)	5550 / 6850 (12235.5 / 15101.4)

*{ } : Option

* The specifications and information above-ntioned may be changed without prior notice.

⁎ For more details, please contact DN Solutions.

Machine Specifications

PUMA 2600 series

Description			Unit	PUMA 2600MS/LMS/LMSB	PUMA 2600Y/LY	PUMA 2600SY/LSY/LSYB
Capacity	Swing over bed		mm (inch)	780 (30.7)		
	Swing over front door		mm (inch)	630 (24.8)		
	Swing over saddle*		mm (inch)	680 (26.8)		
	Recom. Turning diameter		mm (inch)	255 (10.0)		
	Max. turning diameter		mm (inch)	376 (14.8)	376 (14.8)	
	Max. turning length		mm (inch)	760 / 1280 (29.9 / 50.4)	760 / 1280 (29.9 / 50.4)	
	Bar working diameter		mm (inch)	76 (3.0)		
Travels	Travel distance	X-axis	mm (inch)	260 (10.2)		
		Z-axis	mm (inch)	830 / 1350 (32.7 / 53.1)		
		Y-axis	mm (inch)	-	105 (±52.5) (4.1 (±2.1))	
		B-axis	mm (inch)	830 / 1350 (32.7 / 53.1)	-	830 / 1350 (32.7 / 53.1)
Feedrates	Rapid traverse	X-axis	m/min (ipm)	30 (1181.1)		
		Z-axis	m/min (ipm)	30 (1181.1)		
		Y-axis	m/min (ipm)	-	10 (393.7)	
		B-axis	m/min (ipm)	30 (1181.1)	-	30 (1181.1)
Spindle	Spindle speed (Belt Type)		r/min	3500		
	Spindle speed (Built-in Type)		r/min	-	PUMA 2600Y II series	
	Spindle nose			ASA A2#8		
	Spindle bearing diameter (Front)		mm (inch)	140 (5.5)		
	Spindle through hole diameter		mm (inch)	86 (3.4)		
	Min. spindle indexing angle (C-axis)		deg	0.001	0.001	
Turret	No. of tool stations		st	12 {24}*	12 {24}*	
	OD tool size		mm (inch)	25 {20}* (1.0 {0.8})	25 {20}* (1.0 {0.8})	
	Boring bar diameter		mm (inch)	50 {40}* (2.0 {1.6})	50 {40}* (2.0 {1.6})	
	Indexing time (1st swivel time)		s	0.15		
	Rotary tool spindle speed		r/min	5000	5000	
Tail stock	Quill diameter		mm (inch)	-	100 (3.9)	-
	Quill bore taper (Live)			-	MT#5	-
	Compressed air supply		mm (inch)	-	100 (3.9)	-
Sub-spindle	Spindle speed (Belt [Built-in])		r/min	4500	-	4500 [PUMA 2600SY II /LSY II]
	Spindle nose			ASA A2-5	-	ASA A2-5
	Spindle bearing diameter (Front)		mm (inch)	90 (3.5)	-	90 (3.5)
	Spindle through hole diameter		mm (inch)	62 (2.4)	-	62 (2.4)
	Min. spindle indexing angle (C-axis)		deg	0.001	-	0.001
Motors	Main spindle motor		kW (Hp)	30 / 22 / 18.5 (40.2 / 29.5 / 24.8) (S6 25% / S6 60% / S1 Cont.)		
	Sub spindle motor		kW (Hp)	7.5 / 5.5 (11 / 7)	-	7.5 / 5.5 (11 / 7)
	Rotary tool spindle motor		kW (Hp)	5.5 {7.5}* (7 {10})	5.5 {7.5}* 7 {10}	
	Coolant pump motor		kW (Hp)	0.4 (0.5)		
Power source	Electric power supply (Rated capacity)		kVA	52.57	46.40	54.55
Machine size	Machine height		mm (inch)	1900 (74.8)	2163 (85.2)	
	Machine dimension	length	mm (inch)	3650 / 4335 (143.7 / 170.7)		
		width	mm (inch)	1863 / 1965 (73.3 / 77.4)		
	Machine weight		kg (lb)	6000 / 7300 (13227.5 / 16093.5)	6000 / 7300 (13227.5 / 16093.5)	6450 / 7750 (14219.6 / 17085.6)

*{ }: Option

* The specifications and information above-ntioned may be changed without prior notice.
⁎ For more details, please contact DN Solutions.

Machine Specifications

PUMA
2600 series

Description			Unit	PUMA 2600/500	PUMA 2600M/500	PUMA 2600B/LB	PUMA 2600MB/LMB
Capacity	Swing over bed		mm (inch)	780 (30.7)			
	Swing over front door		mm (inch)	630 (24.8)			
	Swing over saddle*		mm (inch)	680 (26.8)			
	Recom. Turning diameter		mm (inch)	255 (10.0)		305 (12.0)	
	Max. turning diameter		mm (inch)	481 (18.9)	376 (14.8)	481 (18.9)	376 (14.8)
	Max. turning length		mm (inch)	550 (21.7)	520 (20.5)	755 / 1275 (29.7 / 50.2)	725 / 1245 (28.5 / 49.0)
	Bar working diameter		mm (inch)	65 (2.6)		102 (4.0)	
Travels	Travel distance	X-axis	mm (inch)	260 (10.2)			
		Z-axis	mm (inch)	590 (23.2)		830 / 1350 (32.7 / 53.1)	
		Y-axis	mm (inch)	-			
		B-axis	mm (inch)	-			
Feedrates	Rapid traverse	X-axis	m/min (ipm)	30 (1181.1)			
		Z-axis	m/min (ipm)	30 (1181.1)			
		Y-axis	m/min (ipm)	-			
		B-axis	m/min (ipm)	-			
Spindle	Spindle speed (Belt Type)		r/min	3500		2800	
	Spindle nose			ASA A2-8		A2-11	
	Spindle bearing diameter (Front)		mm (inch)	140 (5.5)		160 (6.3)	
	Spindle through hole diameter		mm (inch)	86 (3.4)		115 (4.5)	
	Min. spindle indexing angle (C-axis)		deg	0.001			
Turret	No. of tool stations		st	12	12 {24}*	12	12 {24}*
	OD tool size		mm (inch)	25 (1.0)	25 {20}* (1.0 {0.8})	25	25 {20}* (1.0 {0.8})
	Boring bar diameter		mm (inch)	50 (2.0)	50 {40}* (2.0 {1.6})	50	50 {40}* (2.0 {1.6})
	Indexing time (1st swivel time)		s	0.15			
	Rotary tool spindle speed		r/min	-	5000	-	5000
Tail stock	Quill diameter		mm (inch)	100 (3.9)			
	Quill bore taper (Live)			MT#5			
	Compressed air supply		mm (inch)	100 (3.9)			
Sub-spindle	Spindle speed (Belt [Built-in])		r/min	-			
	Spindle nose			-			
	Spindle bearing diameter (Front)		mm (inch)	-			
	Spindle through hole diameter		mm (inch)	-			
	Min. spindle indexing angle (C-axis)		deg	-			
Motors	Main spindle motor		kW (Hp)	25/18.5/15 (33.5/30/25) (S6 25% / S6 60% / S1 Cont.)		26/22/18.5 (34.9/30/25) (S6 25% / S6 60% / S1 Cont.)	
	Sub spindle motor		kW (Hp)	-			
	Rotary tool spindle motor		kW (Hp)	-	5.5 (7)	-	5.5 (7)
	Coolant pump motor		kW (Hp)	0.4 (0)			
Power source	Electric power supply (Rated capacity)		kVA	33.44	40	40.72	44.42
Machine size	Machine height		mm (inch)	1900 (74.8)			
	Machine dimension	length	mm (inch)	3430 (135.0)		3700/4438 (145.7/174.7)	
		width	mm (inch)	1863 (73.3)			
	Machine weight		kg (lb)	4900 (10802.5)	5000 (11023.0)	5500 / 6800 (12125.2 / 14991.2)	5650 / 6950 (12455.9 / 15321.9)

*{ }: Option

* The specifications and information above-ntioned may be changed without prior notice.

⁎ For more details, please contact DN Solutions.

Machine Specifications

PUMA 2600 series

Description			Unit	PUMA 2600SB	PUMA 2600MSB
Capacity	Swing over bed		mm (inch)	780 (30.7)	
	Swing over front door		mm (inch)	630 (24.8)	
	Swing over saddle*		mm (inch)	680 (26.8)	
	Recom. Turning diameter		mm (inch)	305 (12.0)	
	Max. turning diameter		mm (inch)	481 (18.9)	376 (14.8)
	Max. turning length		mm (inch)	755 (29.7)	725 (28.5)
	Bar working diameter		mm (inch)	102 (4.0)	
Travels	Travel distance	X-axis	mm (inch)	260 (10.2)	
		Z-axis	mm (inch)	830 (32.7)	
		Y-axis	mm (inch)	-	
		B-axis	mm (inch)	830 (32.7)	
Feedrates	Rapid traverse	X-axis	m/min (ipm)	30 (1181.1)	
		Z-axis	m/min (ipm)	30 (1181.1)	
		Y-axis	m/min (ipm)	-	
		B-axis	m/min (ipm)	30 (1181.1)	
Spindle	Spindle speed (Belt Type)		r/min	2800	
	Spindle nose			ASA A2-11	
	Spindle bearing diameter (Front)		mm (inch)	160 (6.3)	
	Spindle through hole diameter		mm (inch)	115 (4.5)	
	Min. spindle indexing angle (C-axis)		deg	-	0.001
Turret	No. of tool stations		st	12	12 {24}*
	OD tool size		mm (inch)	25 (1.0)	25 {20} (1.0 {0.8})*
	Boring bar diameter		mm (inch)	50 (2.0)	50 {40} (2.0 {1.6})*
	Indexing time (1st swivel time)		s	0.15	
	Rotary tool spindle speed		r/min	-	5000
Tail stock	Quill diameter		mm (inch)	100 (3.9)	
	Quill bore taper (Live)			MT#5	
	Compressed air supply		mm (inch)	100 (3.9)	
Sub-spindle	Spindle speed (Belt [Built-in])		r/min	4500	
	Spindle nose			ASA A2#5	
	Spindle bearing diameter (Front)		mm (inch)	90 (3.5)	
	Spindle through hole diameter		mm (inch)	62 (2.4)	
	Min. spindle indexing angle (C-axis)		deg	0.001	
Motors	Main spindle motor		kW (Hp)	26/22/18.5 (34.9/30/25) (S6 25% / S6 60% / S1 Cont.)	
	Sub spindle motor		kW (Hp)	7.5 / 5.5 (10 / 7)	
	Rotary tool spindle motor		kW (Hp)	-	5.5 (7)
	Coolant pump motor		kW (Hp)	0.4 (0)	
Power source	Electric power supply (Rated capacity)		kVA	48.86	
Machine size	Machine height		mm (inch)	1900 (74.8)	
	Machine dimension	length	mm (inch)	3918 (154.3)	
		width	mm (inch)	1863 (73.3)	
	Machine weight		kg (lb)	5950 (13117.3)	6100 (13448.0)

*{ }: Option

* The specifications and information above-ntioned may be changed without prior notice.

⁎ For more details, please contact DN Solutions.

Machine Specifications

PUMA 3100 series

Description			Unit	PUMA 3100 /L/XL/UL	PUMA 3100 M/LM/XLM/ULM	PUMA 3100 Y(SY)/LY(LSY)/XLY(B)/ULY(B)
Capacity	Swing over bed		mm (inch)	850 (33.5)		
	Swing over front door		mm (inch)	670 (26.4)		
	Swing over saddle*		mm (inch)	720 (28.3)** / 850 (33.5)***		
	Recom. Turning diameter		mm (inch)	315 (12.4)		315 (12.4) (XLYB/ULYB : 380(15.0))
	Max. turning diameter		mm (inch)	525 (20.7)	420 (16.5)	
	Max. turning length		mm (inch)	790 / 1310 / 2150 / 3150 (31.1 / 51.6 / 84.6 / 124.0)	765 / 1285 / 2125 / 3125 (30.1 / 50.6 / 83.7 / 123.0)	
	Bar working diameter		mm (inch)	102 (4.0)		102 (4.0) (XLYB/ULYB : 116.5(4.6))
Travels	Travel distance	X-axis	mm (inch)	293 {30.5+262.5} (11.5 {1.2+10.3})*	293 {83+210} (11.5 {3.3+8.3})*	
		Z-axis	mm (inch)	830 / 1350 / 2190 / 3190(32.7 / 53.1 / 86.2 / 125.6)		
		Y-axis	mm (inch)	-		130 (±65) (5.1 (±2.6))
		B-axis	mm (inch)	-		750/1270(29.5/50.0) (SY/LSY)
Feedrates	Rapid traverse	X-axis	m/min (ipm)	30 (1181.1)		
		Z-axis	m/min (ipm)	30 / 30 / 30 / 26 (1181.1 / 1181.1 / 1181.1 / 1023.6)		
		Y-axis	m/min (ipm)	-		10 (393.7)
		B-axis	m/min (ipm)	-		30 (1181.1)
Spindle	Spindle speed (Belt Type)		r/min	2800		2800 (XLYB/ULYB : 2000)
	Spindle speed (Built-in Type)		r/min	3000		3000 (XLYB/ULYB : N/A)
	Spindle nose			ASA A2#11		
	Spindle bearing diameter (Front)		mm (inch)	160 (6.3)		160 (6.3) (XLYB/ULYB : 180(7.1))
	Spindle through hole diameter		mm (inch)	115 (4.5)		115 (4.5) (XLYB/ULYB : 132(5.2))
	Min. spindle indexing angle (C-axis)		deg	0.001		
Turret	No. of tool stations		st	10	12	
	OD tool size		mm (inch)	25 (1.0)		
	Boring bar diameter		mm (inch)	50 (2.0)		
	Indexing time (1st swivel time)		s	0.15		
	Rotary tool spindle speed		r/min	-	5000	
Tail stock	Quill diameter		mm (inch)	100 / 100 / 120 / 120 (3.9 / 3.9 / 4.7 / 4.7)		
	Quill bore taper (Live)			Live MT#5 **/Built-in MT#5***		
	Compressed air supply		mm (inch)	100 / 100 / 120 / 120 (3.9 / 3.9 / 4.7 / 4.7)		
Sub-spindle	Spindle speed (Belt [Built-in])		r/min	-		4000
	Spindle nose			-		A2-8
	Spindle bearing diameter (Front)		mm (inch)	-		130
	Spindle through hole diameter		mm (inch)	-		91
	Min. spindle indexing angle (C-axis)		deg	-		0.001
Motors	Main spindle motor		kW (Hp)	26/22/18.5 (34.9/30/25) (S6 25% / S6 60% / S1 Cont.)		26/22/18.5 (34.9/30/25) (XLYB/ULYB : 30/22)
	Sub spindle motor		kW (Hp)	-		30/26/22 (48.3/34.9/30) (S6 25% / 30min / S1 Cont.)
	Rotary tool spindle motor		kW (Hp)	7.5 / 5.5 (7 / 10)		
	Coolant pump motor		kW (Hp)	-	5.5 {7.5} (7 {10})	
Power source	Electric power supply (Rated capacity)		kVA	42.04 / 42.04 / 42.83 / 42.83	44.83 / 44.83 / 45.61 / 45.61	46.81 / 46.81 / 47.59 / 47.59 (SY/LSY : 62.84, XLYB/ULYB : 52.02)
Machine size	Machine height		mm (inch)	2020 / 2020 / 2315 / 2315 (79.5 / 79.5 / 91.1 / 91.1)		2315 (91.1)
	Machine dimension	length	mm (inch)	3910 / 4530 / 5615 / 6585 (153.9 / 178.3 / 221.1 / 259.3) (XLYB : 5857 (230.6), ULYB : 6827 (268.8))		
		width	mm (inch)	2002 / 2105 / 2280 / 2280 (78.8 / 82.9 / 89.8 / 89.8) (SY : 1978(77.9) / LSY : 2067(81.4))		
	Machine weight		kg (lb)	5850/ 7350 / 10150 / 11650 (12896.9 / 16203.7 / 22376.6 / 23683.5)	6000 / 7500 / 10300 / 11800 (13227.5 / 16534.4/ 22707.3 / 26014.4)	6500 / 8000 / 10800 / 12300 (14329.8 / 17636.7 / 23809.6 / 27116.5) (SY : 7000(15432.1), LSY : 8500(18739.0), XLYB : 11000(24250.5), ULYB : 12500(27557.4))

*{ } : Option

* The specifications and information above-ntioned may be changed without prior notice.
** : PUMA 3100/M/L/LM/Y/LY
*** : PUMA 3100XL/UL/XLM/ULM/XLY/ULY

∗ For more details, please contact DN Solutions.

NC Unit Specifications

FANUC

● Standard ○ Optional X Not applicable

NO.	Division	Item	Spec.	DN Solutions Fanuc i Plus						Fanuc 31i	
				2-Axis	M	MS	Y	SY	S	Y	SY
1	Controlled axis	Controlled axes		2 (X,Z)	3 (X,Z,C)	4 (X,Z,C,B)	4(X,Z,C,Y)	6 (X,Z,C1, Y,C2,B)	3 (X,Z,B)	4 (X,Z,C,Y)	6 (X,Z,C1, Y,C2,B)
2		Cs contouring control		X	●	●	●	●	X	●	●
3		Synchronous / Composite control (C1 & C2 Synchro Control)		X	X	●	X	●	X	X	●
4		Torque control		●	●	●	●	●	●	●	●
5		HRV2 control		●	●	●	●	●	●	●	●
6		Inch / metric conversion		●	●	●	●	●	●	●	●
7		Stored limit check before move		●	●	●	●	●	●	○	○
8		Chamfering on / off		●	●	●	●	●	●	●	●
9		Unexpected disturbance torque detection function		●	●	●	●	●	●	●	●
10		Position switch		●	●	●	●	●	●	●	●
11	Operation	DNC operation	Included in RS232C interface.	●	●	●	●	●	●	●	●
12		DNC operation with memory card		●	●	●	●	●	●	●	●
13		Tool retract and recover		○	○	○	○	○	○	○	○
14		Dry run (드라이 런)		●	●	●	●	●	●	●	●
15		Single block (싱글 블록)		●	●	●	●	●	●	●	●
16		Handle interruption		○	○	○	○	○	○	○	○
17		Incremental feed	x1,x10,x100	●	●	●	●	●	●	●	●
18		Manual handle retrace		○	○	○	○	○	○	○	○
19		Active block cancel		○	○	○	○	○	○	○	○
20	Interpolation functions	Nano interpolation		●	●	●	●	●	●	●	●
21		Linear interpolation		●	●	●	●	●	●	●	●
22		Circular interpolation		●	●	●	●	●	●	●	●
23		Polar coordinate interpolation		X	●	●	●	●	X	●	●
24		Cylindrical interpolation		X	●	●	●	●	X	●	●
25		Helical interpolation		X	○	○	●	●	X	●	●
26		Thread cutting, synchronous cutting		●	●	●	●	●	●	●	●
27		Multi threading		●	●	●	●	●	●	●	●
28		Thread cutting retract		●	●	●	●	●	●	●	●
29		Continuous threading		●	●	●	●	●	●	●	●
30		Variable lead thread cutting		●	●	●	●	●	●	○	○
31		Circular thread cutting		○	○	○	○	○	○	○	○
32		Polygon machining with two spindles		X	●	●	●	●	X	○	○
33		High-speed skip	Input signal is 8 points.	○	○	○	○	○	○	○	○
34		2nd reference position return	G30	●	●	●	●	●	●	●	●
35		3rd/4th reference position return		●	●	●	●	●	●	○	○
36	Feed function	Override cancel		●	●	●	●	●	●	●	●
37		AI contour control I		○	○	○	●	●	○	●	●
38		AI contour control II		○	○	○	○	○	○	○	○
39		Rapid traverse block overlap		●	●	●	●	●	●	●	●
40	Program input	Optional block skip	9 pieces	●	●	●	●	●	●	●	●
41		Absolute / incremental programming	Combined use in the same block	●	●	●	●	●	●	●	●
42		Diameter / Radius programming		●	●	●	●	●	●	●	●
43		Automatic coordinate system setting		●	●	●	●	●	●	●	●
44		Workpiece coordinate system	G52 - G59	●	●	●	●	●	●	●	●
45		Workpiece coordinate system preset		●	●	●	●	●	●	○	○
46		Addition of workpiece coordinate system	48 pairs	X	X	X	X	X	X	○	○
47		Direct drawing dimension programming		●	●	●	●	●	●	●	●

● Standard ○ Optional X Not applicable

NO.	Division	Item	Spec.	DN Solutions Fanuc i Plus						Fanuc 31i	
				2-Axis	M	MS	Y	SY	S	Y	SY
48	Program input	G code system	A	●	●	●	●	●	●	●	●
49		G code system	B/C	●	●	●	●	●	●	●	●
50		Chamfering / Corner R		●	●	●	●	●	●	○	○
51		Custom macro		●	●	●	●	●	●	●	●
52		Addition of custom macro common variables	#100 - #199, #500 - #999	●	●	●	●	●	●	○	○
53		Interruption type custom macro		●	●	●	●	●	●	○	○
54		Canned cycle		●	●	●	●	●	●	●	●
55		Multiple repetitive cycles	G70~G76	●	●	●	●	●	●	●	●
56		Multiple repetitive cycles II	Pocket profile	●	●	●	●	●	●	●	●
57		Canned cycle for drilling		●	●	●	●	●	●	●	●
58		Automatic corner override		X	X	X	X	X	X	○	○
59		Coordinate system shift		●	●	●	●	●	●	●	●
60		Direct input of coordinate system shift		●	●	●	●	●	●	●	●
61		Pattern data input		●	●	●	●	●	●	○	○
62	Operation Guidance Function	EZ Guidei (Conversational Programming Solution)		●*1)	●*1)	●*1)	●*1)	●*1)	●*1)	●	●
63		iHMI with Machining Cycle		○*2)	○*2)	○*2)	○*2)	○*2)	○*2)	X	X
64		EZ Operation package		●	●	●	●	●	●	●	●
65	Auxiliary / Spindle speed function	Constant surface speed control		●	●	●	●	●	●	●	●
66		Spindle override (스핀들 속도오버라이드)	0 - 150%	●	●	●	●	●	●	●	●
67		Spindle orientation (스핀들 오리엔테이션)		●	●	●	●	●	●	●	●
68		Spindle synchronous control		X	X	●	X	●	●	X	●
69		Rigid tap		●	●	●	●	●	●	●	●
70		Arbitrary speed threading		○	○	○	○	○	○	○	○
71	Tool function / Tool compensation	Tool offset pairs	32-pairs	X	X	X	X	X	X	●	●
72			64-pairs	X	X	X	X	X	X	○	○
73			99-pairs	X	X	X	X	X	X	○	○
74			128-pairs	●	●	●	●	●	●	X	X
75			200-pairs	○	○	○	○	○	○	○	○
76			400 / 499 / 999-pairs	X	X	X	X	X	X	○	○
77		Tool offset		●	●	●	●	●	●	●	●
78		Tool radius/Tool nose radius compensation		●	●	●	●	●	●	●	●
79		Tool geometry / wear compensation		●	●	●	●	●	●	●	●
80		Automatic tool offset	G36/G37	●	●	●	●	●	●	●	●
81		Direct input of offset value measured B		●	●	●	●	●	●	●	●
82		Tool life management		●	●	●	●	●	●	●	●
83	Accuracy compensation function	Backlash compensation for each rapid traverse and cutting feed		●	●	●	●	●	●	●	●
84		Stored pitch error compensation		○	○	○	○	○	○	○	○
85	Editing operation	Part program storage size & Number of registerable programs	640M(256KB)_500 programs	X	X	X	X	X	X	●	●
86			1280M(512KB) / 2560M(1MB) / 10240M(4MB) / 20480M(8MB)_1000 programs	X	X	X	X	X	X	○	○
87			5120M(2MB)_1000 programs	●	●	●	●	●	●	○	○
92			2560M(1MB)_2000, 5120M(2MB) / 10240M(4MB) / 20480M(8MB)_4000 programs	X	X	X	X	X	X	○	○
93		Program protect		●	●	●	●	●	●	●	●
94		Password function		●	●	●	●	●	●	●	●
95		Playback		●	●	●	●	●	●	○	○
96	Data input / output	Fast data server		○	○	○	○	○	○	○	○
97		External data input		●	●	●	●	●	●	○	○
98		Memory card input / output		●	●	●	●	●	●	●	●
99		USB memory input / output		●	●	●	●	●	●	●	●
100		Automatic data backup		●	●	●	●	●	●	●	●
101	Interface function	Embedded Ethernet		●	●	●	●	●	●	●	●
102		Fast Ethernet		○	○	○	○	○	○	○	○
103	Others	Display unit	15" color LCD	●	●	●	●	●	●	●	●
104			15" color LCD with Touch Panel	○	○	○	○	○	○	X	X
105	Robot interface	with PMC I/O module		○	○	○	○	○	○	○	○
106		with PROFIBUS-DP		○	○	○	○	○	○	○	○

*1) Only with 15" LCD standard *2) Only with 15" Touch LCD standard

Responding to Customers Anytime, Anywhere

DN Solutions' Global Network, Responding to Customer's Needs nearby, Anytime, Anywhere

DN Solutions provides a system-based professional support service before and after the machine tool sale by responding quickly and efficiently to customers' demands. By supplying spare parts, product training, field service and technical support, we can provide top class support to our customers around the world.

Global Sales and Service Support Network

Countries	+ Sales networks	Factories	Service posts
66	140	3	6

DN Solutions Customer Support Service

We help customers to achieve success by providing a variety of professional services from pre-sales consultancy to post-sales support.

Supplying Parts

- Supplying a wide range of original DN Solutionsspare parts
- Parts repair service

Field Services

- On site service
- Machine installation and testing
- Scheduled preventive maintenance
- Machine repair

Technical Support

- Supports machining methods and technology
- Responds to technical queries
- Provides technical consultancy

Training

- Programming / machine setup and operation
- Electrical and mechanical maintenance
- Applications engineering

DN SOLUTIONS

dn-solutions.com

Head Office

19F, 10, Tongil-ro,
Jung-gu Seoul,
Republic of Korea, 04527
Tel: +82-2-6972-0370/0350
Fax: +82-2-6972-0400

DN Solutions America

19A Chapin Road,
Pine Brook New Jersey 07058,
United States
Tel: +1-973-618-2500
Fax: +1-973-618-2501

DN Solutions Europe

Emdener Strasse 24,
D-41540 Dormagen, Germany
Tel: +49-2133-5067-100
Fax: +49-2133-5067-111

DN Solutions India

No.82, Jakkuar Village
Yelahanka Hobil,
Bangalore-560064
Tel: + 91-80-2205-6900
E-mail:
india@dncompany.com

DN Solutions China

Room 101,201,301,
Building 39 Xinzhuan Highway
No.258 Songjiang District
China Shanghai (201612)
Tel: +86 21-5445-1155
Fax: +86 21-6405-1472

DN Solutions Mexico

Avenida central 605,
Parque Logistico,
San Luis Potosi, 78395, Mexico

DN Solutions Vietnam

M.O.R.E building 2F, 40A-40B
Ut Tich Street, 04 Ward 04,
District Tan Binh District,
Ho Chi Minh City, Vietnam
Tel: +84 28-7304-0163

Sales inquiry

sales@dncompany.com

** For more details, please contact DN Solutions.*
** Specifications and information contained within this catalogue may be changed without prior notice.*

ver. EN 250228 SU