SIMPLY BETTER.

Complete Catalogue 2026

(August 2026)

Helt enkelt bättre.

Egyszerűen jobb.

Meilleur...

Po prostu lepszy.

Bare bedre.

Gewoon beter.

Simply better.

Prostě lepší.

Einfach besser.

Simplemente mejor.

Просто лучше.

Semplicemente migliore.

Simplesmente Melhor.

WARNING AND USAGE NOTICES.

GENERAL

- Only use the hand tool properly. Observe the enclosed operating instructions.
- Never change or modify tools. They are only permitted to be used in their original state. Only use original spare parts if required. Exceptions: Sharpen cutting tools properly.
- Never work with damaged tools. Damaged tools must be replaced immediately.
- Handles must be free of oil and grease.
- Tasks while clamped may only be carried out by trained staff using VDE tools that are suitable for this purpose.
- Wear safety goggles for all tasks in which chips may be formed or in which parts can flake off.
- Protect your hands by wearing working or assembly gloves depending on the task.
- Select a stable base to ensure safe standing. Wear safety shoes.
- Observe the maintenance instructions. Proper use can only be guaranteed if the tools are maintained regularly. The maintenance instructions are provided at www.bessey.de.
- Furthermore, the relevant safety precautions from the various institutions such as the regulations from the accident prevention and insurance associations, instructions from your employer and the legal regulations of the appropriate country also apply.

CLAMPING TOOLS

- Clamping tools are not suitable for lifting, pulling or transporting.
- Clamping tools may only be clamped manually without using any auxiliary tools.
- Improper use can cause personal injuries or material damage.
- Never change or modify clamping tools. Only use them in their original condition. Only use original spare parts if required.

Wood Steel Plastic Sensitive materials

CUTTING TOOLS

- Manual sheet metal snips may only be used to cut thin sheets of soft metals or steel. They are not suitable for cutting through round or rectangular section metal shapes such as wires.
- Cutting tools may only be used manually without using any auxiliary tools.
- Always wear safety goggles and gloves when working. Cut parts can injure workers and bystanders.
- Improper use can cause personal injuries or material damage.
- Disconnect the connection to the power supply when carrying out work on electrical equipment. Otherwise, you may get an electric shock.
- Always cut away from the head when using snips and knives.
- Always store cutting tools with the cutting edges closed and in a location where they are clearly visible. The handle must be pointing towards you.
- Store cutting tools separately. This saves the cutting edges and your fingers.
- Sharpen cutting tools regularly. Blunt tools increase the risk of injury and require more force for the same cutting performance.

PLIERS

- Wear safety goggles and gloves while working. Cut parts can injure workers and bystanders.
- Disconnect the connection to the power supply when carrying out work on electrical equipment. Otherwise, you may get an electric shock.
- Never use pliers as a hammer.
- Check the jaws for wear. Worn jaws cause slipping and result in accidents.
- Grip pliers are only suitable for fixing workpieces for a short time.

GENERAL PRODUCT INFORMATION

1. BESSEY reserves the right to change the technical specifications at any time. It is possible that certain product specifications may differ from region to region, to satisfy the international market.
2. All illustrations produced by BESSEY and that show BESSEY tools in use are only intended to provide the person viewing them with an impression of the tools relevant area of application. When taking the photographs, safety clothing such as gloves was sometimes not worn, in order to demonstrate the products better. However, this does not relieve the customer of their obligation to wear suitable safety clothing when working with BESSEY clamping and cutting tools.
3. The customer takes sole responsibility for confidentiality and use of information on a product and for using or operating a product. BESSEY explicitly rejects any liability for direct, indirect, accidental or subsequent damage. Furthermore, all claims for damages, compensation for loss and other claims are limited to the purchase price of the relevant product.

We request you to place your orders in packaging units.

The BESSEY Product Development Department reserves the right for technical alterations. Errors and omissions excepted – to the best of our knowledge the information supplied is accurate.

Note that you are not entitled to any claims from the contact or delict, in particular product liability claims due to personal injuries or material damage, from our company if you do not observe our warning and usage notices.

TABLE OF CONTENTS

BESSEY CLAMPING TOOLS.

Malleable cast iron screw clamps 20

All-steel screw clamps 32

Lever clamps 42

High-performance clamps 46

U-clamps 52

Claw clamps 56

Variable high-performance clamps 58

C-clamps 64

Grip pliers 67

Earth (ground) clamps 70

Metal angle clamps 73

Clamping elements for welding tables 75

Machine table clamps 82

Self-adjusting toggle clamps 88

One-handed lifting tool NEW 96

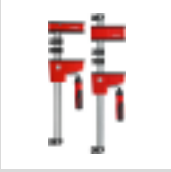
Parallel clamps and area pressure clamps 100

Gearclamp 109

One-handed clamps NEW 112

Rafter clamps 121

Lightweight clamps 123

Spring and ratchet clamps 127

Mini Vice 131

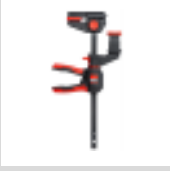
Table clamps NEW 133

Band clamps 137

TABLE OF CONTENTS

BESSEY CLAMPING TOOLS.

Angle and mitre clamps 140

Edge clamps 143

Clamping elements for workbenches 146

Clamping elements for multifunction tables 150

Mobile glue presses 155

Telescopic drywall supports NEW 158

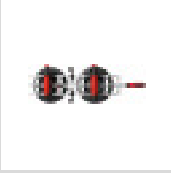
Seaming tool 167

Door frame and window assembly tools 170

Special flooring tools 175

Panel carrier 178

Clamp trolley 180

TABLE OF CONTENTS

BESSEY CUTTING TOOLS.

Compound leverage snips 186

Shape and straight cutting snips, small and manoeuvrable 196

High-performance snips with HSS edges 198

Standard tin snips 202

Multi-purpose cutters 209

Folding utility knives and Multitool 215

Jewellers‘ and thin sheet snips 219

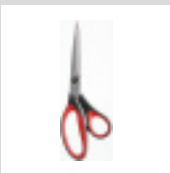
Household and multi-purpose shears 222

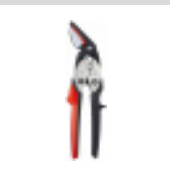
Steel strap cutters 226

Tools for sheet metal work and plumbing 229

ALPHABETICAL REGISTER.

3100736 50,54,61,122
3100737 50,54,61,122
3101192 50,54,61,122
3101193 50,54,61,122
3101329 63
3101330 63
3101331 63
3101337 62
3101338 62
3101426 62
3101612 62
3101731 61
3101732 61
3101733 61
3101952 162

A
AM4 125
AV2 176

B
BAN400 138
BAN700 138
BAS-C9-4 83
BAS-C10-6 83
BAS-CB9-4 83
BAS-CB10-6 83
BASO 84
BEY23 98
BEY-IK 99
BH-MFT 151
BPC-H12 156
BPC-H34 156
BS2N 85
BS3N 85
BS4N 85
BS5N 85
BS6N 85
BSG21-14 87
BSP-C10-6 83
BSP-CB10-6 83
BVE 139

C
CDF403C 66
CDF404C 66
CDF406C 66
CDF408C 66
CDF410C 66
CP-F 72

D
D08 193
D08L 193
D08L-SB 193
D08-SB 193
D15A 197
D15AL 197
D15AL-SB 197
D15A-SB 197
D16 194
D16L 194
D16L-SB 194
D16S 195
D16-SB 194
D16S-SB 195
D17A 192
D17AL 192
D17ASS 192
D17ASSL 192
D22A 193
D22A-SB 193
D27 191
D27A 191
D27AH 199
D27AHL 199
D27AHL-TIN 199
D27AH-TIN 199
D27AL 191
D27AL-SB 191
D27A-SB 191
D27B 192
D27BL 192
D27L 191
D29ASS-2 189
D29ASS-2-SB 189
D29ASSL-2 189
D29ASSL-2-SB 189
D29BSS-2 190
D29BSSL-2 190
D29SS-2 190
D29SSL-2 190
D33-60 230
D33-60-P 230
D34-60 230
D34-60-P 230
D35-60 230
D35-60-P 230
D36 234
D39ASS 188
D39ASSL 188
D39ASSL-SB 188
D39ASS-SB 188
D47 212
D47-2 210
D48 212
D48-2 210
D48A 212
D48A-2 211
D49 213
D49-2 211
D50 214
D51A 213
D52-2 210
D53 224
D70-1 220
D71-1 220
D72-1 220
D74-1 221
D75-1 221
D76-1 221
D102-250 208
D102-250-SB 208
D102-300 208
D106-250-SB 207
D106A-250-SB 207
D107-250 206
D107-250L 206
D107-250L-SB 206
D107-250-SB 206
D107-275 206
D107-275L 206
D107-300 206
D107-300L 206
D114-250 205
D114-250L 205
D116-260 203
D116-260L 203
D116-260L-SB 203
D116-260-SB 203
D116-280 203
D116-280L 203
D116-280L-SB 203
D116-280-SB 203
D118-300 205
D118-300L 205
D118-300L-SB 205
D118-300-SB 205
D118-350 205
D122A 228
D122A-SB 228
D122N 227
D123S 227
D123S-SB 227
D146-200 208
D146-250 208
D146-300 208
D146-350 208
D202-250 208
D202-300 208
D207-250 206
D207-250L 206
D207-275 206
D207-275L 206
D207-300 206
D207-300L 206
D208-275 206
D208-275L 206
D214-250 205
D214-250L 205
D216-260 203
D216-260L 203
D216-280 203
D216-280-B-SBSK 204
D216-280L 203
D216-280L-B-SBSK 204
D218-300 205
D218-300L 205
D218-350 205
D301 231
D311 232
D331-22 231
D331-40 230
D331-60 230
D331-60-P 230
D331-80 230
D335 233
D336 233
D341-22 231
D341-40 230
D341-60 230
D341-60-P 230
D341-80 230
D351-60 230
D351-60-P 230
D355 232
D396 234
D407-275 200
D407-275L 200
D407-300 200
D407-300L 200
D416-280 200
D416-280L 200
D418-300 201
D418-350 201
D820-200 223
D820-250 223
D821-160 223
D821-180 223
D840-150 224
D840-180 224
D853-200 225
D860-200 225
D860-225 225
D860-250 225
DBKAH-EU 217
DBK-H 218
DBK-L 218
DBKPH-EU 216
DBKPH-SET 216
DBK-T 218
DBKWH-EU 217
DBST 218
DSET15 197
DSET16 195
DSET29-15 189
DSET-SF3 204
DUO16-8 119
DUO30-8 119
DUO45-8 119
DUO65-8 119

E
EHZ30-2K 113
EHZ60-2K 113
EZ360-15 115
EZ360-30 115
EZ360-45 115
EZ360-60 115
EZ360M-15 115

ALPHABETICAL REGISTER.

EZ360M-30 115
EZ360S-11SET 115
EZL15-8 117
EZL30-8 117
EZL45-8 117
EZL60-8 117
EZM15-6 117
EZM30-6 117
EZM-EZL-SET 118
EZR360-15SET 135
EZS11-4SET 117
EZS15-8 120
EZS30-8 120
EZS45-8 120
EZS60-8 120
EZS90-8 120
EZ-TD 118
EZXL30-9 117
EZXL60-9 117
EZXL90-9 117

F

FK16-8 107
FK20-10 107
FK40-10 107
FRK85 174

G

GH12 43
GH16 43
GH20 43
GH20-8 43
GH25 43
GH30 43
GH30-12 43
GH40 43
GH40-12 43
GH50 43
GH60 43
GH80 43
GH100 43
GK15 111
GK30 111
GK45 111
GK60 111
GM16Z-2K 40
GM20Z-2K 40
GM20ZK 40
GM25Z-2K 40
GM25ZK 40
GM30Z-2K 40
GM30ZK 40
GM40Z-2K 40
GM50Z-2K 40
GM50ZK 40
GM60Z-2K 40
GM60ZK 40
GRA30-12 57
GRA60-12 57
GRA100-12 57
GRD 57
GRS20-12 86
GRZ10 68
GRZ20 68
GRZC 68
GRZRO 69
GS10 38
GS12 38
GS16 38
GS16K 39
GS20 38
GS20K 39
GS25 38
GS25K 39
GS30 38
GS30K 39
GS40 38
GS40K 39
GS50 38
GS50K 39
GS60 38
GS60K 39
GS80 38
GS80K 39
GS100 38
GS100K 39
GSH12 44
GSH16 44
GSH20 44
GSH25 44
GSH30 44
GSH40 44
GSH50 44
GSH60 44
GSL30 50
GSL60 50
GSM25 51
GSM30 51
GSM40 51
GSM50 51
GSM60 51
GSV300M 60
GTR12 136
GTR12SET 136
GTR16B6 136
GTR16S6H 136
GTR30B6 136
GU25-12-6H 55
GU25-12-6ZK 53
GZ10 34
GZ10-2K 33
GZ12 34
GZ12-2K 33
GZ16 34
GZ16-2K 33
GZ16K 35
GZ20 34
GZ20-2K 33
GZ20K 35
GZ25 34
GZ25-2K 33
GZ25K 35
GZ25KG 37
GZ30 34
GZ30-2K 33
GZ30-6 34
GZ30-10 34
GZ30-12 34
GZ30-12-2K 33
GZ30-12KG 37
GZ30K 35
GZ40 34
GZ40-2K 33
GZ40-8-2K 33
GZ40-12 34
GZ40-12-2K 33
GZ40-12KG 37
GZ40K 35
GZ50 34
GZ50-2K 33
GZ50-12-2K 33
GZ50-12KG 37
GZ50K 35
GZ60 34
GZ60-2K 33
GZ60-12-2K 33
GZ60-12KG 37
GZ60K 35
GZ80 34
GZ80-2K 33
GZ80-12-2K 33
GZ80K 35
GZ100 34
GZ100-2K 33
GZ100-12-2K 33
GZ100K 35
GZ125 34
GZ125-2K 33
GZ125K 35

H

HKL20 125
HKL30 125
HKL40 125
HKL60 125
HKL80 125
HKL100 125

K

KBX20 106
KF2 144
KF4 144
KFP 179
KLI12 45
KLI16 45
KLI20 45
KLI25 45
KLI30 45
KLI40 45
KLI-D 45
KLI-S 45
KP 104
KR-AS 105
KRE30-2K 103
KRE60-2K 103
KRE80-2K 103
KRE100-2K 103
KRE125-2K 103
KRE150-2K 103
KRE200-2K 103
KRE250-2K 103
KRE-SET-A 104
KREV100-2K 102
KREV150-2K 102
KREV200-2K 102
KREV250-2K 102
KRE-VO 104
KS100 108
KS150 108
KSV 108
KT5-1CP 145
KT5-2 145
KT8-3 145

L

LM10/5 124
LM10/5R8 106
LM15/5 124
LM15/5R8 106
LM15/8 124
LM20/5 124
LM20/8 124
LM20/10 124
LM25/5 124
LM25/8 124
LM25/10 124
LM30/5 124
LM30/8 124
LM30/10 124
LM40/10 124
LM50/10 124
LM60/10 124
LM80/10 124
LMU10/5 124
LMU15/5 124
LMU20/5 124
LP-1 71
LP-1F 71

M

MCX 142
MFT-A 152

P

PA28 126
PA40 126
PA55 126
PA70 126
PA105 126
PS55 169

ALPHABETICAL REGISTER.

PS130 168
PVA 176

R
RB269 106

S
S10-ST 132
SC40 65
SC60 65
SC80 65
SC100 65
SC120 65
SC150 65
SC200 65
SG-25HS 43
SG25M 47
SG30M 47
SG30T20M 48
SG30VAD 41
SG40M 47
SG-50HS 43
SG50M 47
SG60M 47
SG60T20M 48
SG80M 47
SG100M 47
SG125M 47
SG150M 47
SGU30-14-10 53
SL20M 47
SL25M 47
SL30M 47
SL40M 47
SL50M 47
SL60M 47
SLV100M 59
SLV150M 59
SLV200M 59
SM10-SET 74
SPZ60K 122
SPZ80K 122
ST125 162
ST250 162
ST290 162
STB30M 48
STB40M 48
STB50M 48
STB60M 48
STB80M 48
STB100M 48
STB125M 48
STB150M 48
STBS30 49
STBS50 49
STBS100 49
STBU40-17-15 54
STBVC15 49
STBVC25 49
STBVC35 49
STC-HH20 91
STC-HH20SB 91
STC-HH50 91
STC-HH50SB 91
STC-HH50-T20 93,154
STC-HH70 91
STC-HH70SB 91
STC-HH70-T20 93,154
STC-IHH15 92
STC-IHH25 92
STC-IHH25SB 92
STC-IHH25-T20 93,154
STC-SET-T20 93,153
STC-S-MFT 94,153
STC-VH20 90
STC-VH50 90
STC-VH50-T20 93,154
STE55 160
STE90 160
STE150 160
STE250 160
STE300 160
STE370 160
STE-BAG 166
STE-BS 163
STE-CC-SET 165
STE-DS 163
STE-KBS 164
STE-LH 165
STE-MH-SET 164
STE-SP35 166
SVG 177
SVH400 177
SVH760 177

T
TB100 156
TB120 156
TB150 156
TB210 156
TB250 156
TFM-2K 172
TG10 23
TG10-2K 21
TG12 23
TG12-2K 21
TG15B5 23
TG16 23
TG16-2K 21
TG20 23
TG20-2K 21
TG20B5 23
TG20B6 23
TG20B8 23
TG20B8-2K 21
TG20K 24
TG25 23
TG25-2K 21
TG25B8 23
TG25B8-2K 21
TG25K 24
TG25S10 23
TG25S10-2K 21
TG30 23
TG30-2K 21
TG30B6 23
TG30B8 23
TG30B8-2K 21
TG30K 24
TG30S10 23
TG30S10-2K 21
TG30S12 23
TG30S12-2K 21
TG40 23
TG40-2K 21
TG40B8 23
TG40B8-2K 21
TG40K 24
TG40S10 23
TG40S10-2K 21
TG40S12 23
TG40S12-2K 21
TG40S12K 24
TG40S14 23
TG40S14-2K 21
TG50S10 23
TG50S10-2K 21
TG50S12 23
TG50S12-2K 21
TG50S14 23
TG50S14-2K 21
TG50S17 23
TG50S17-2K 21
TG60S12 23
TG60S12-2K 21
TG60S14 23
TG60S14-2K 21
TG60S17 23
TG60S17-2K 21
TG80S12 23
TG80S12-2K 21
TG80S14 23
TG80S14-2K 21
TG80S17 23
TG80S17-2K 21
TG100S12 23
TG100S12-2K 21
TG100S14 23
TG100S14-2K 21
TG100S17 23
TG100S17-2K 21
TGK40 24
TGK40-2K 22
TGK50 24
TGK50-2K 22
TGK50K 25
TGK60 24
TGK60-2K 22
TGK80 24
TGK80-2K 22
TGK100 24
TGK100-2K 22
TGK100K 25
TGK125 24
TGK125-2K 22
TGK150 24
TGK150-2K 22
TGK150K 25
TGK200 24
TGK200-2K 22
TGK200K 25
TGK250 24
TGK250-2K 22
TGK250K 25
TGK300 24
TGK300-2K 22
TGK300K 25
TGKR50 29
TGKR60 29
TGKR80 29
TGKR100 29
TGKR125 29
TGKR150 29
TGKR200 29
TGN30T20 30
TGN30T20K 31
TGN30T50 30
TGN30T50K 31
TGN40T20 30
TGN40T20K 31
TGN40T25 30
TGN40T25K 31
TGN40T30 30
TGN40T30K 31
TGN40T40 30
TGN40T40K 31
TGN60T20 30
TGN60T25 30
TGN60T25K 31
TGN60T30 30
TGN60T30K 31
TGN60T40 30
TGN60T40K 31
TGN60T50 30
TGN60T50K 31
TGN80T20 30
TGN80T25 30
TGN80T25K 31
TGN80T30 30
TGN80T30K 31
TGN80T40 30
TGN80T40K 31
TGN80T50 30
TGN80T50K 31
TGN100T20 30
TGN100T25 30
TGN100T30 30
TGN100T40 30
TGN150T30 30
TGN200T30 30

ALPHABETICAL REGISTER.

TGN250T30 ... 30
TGRC10 ... 28
TGRC12 ... 28
TGRC15B5 ... 28
TGRC16 ... 28
TGRC20 ... 28
TGRC20B5 ... 28
TGRC20B6 ... 28
TGRC20B8 ... 28
TGRC25 ... 28
TGRC25B8 ... 28
TGRC25S10 ... 28
TGRC30 ... 28
TGRC30B6 ... 28
TGRC30B8 ... 28
TGRC30S10 ... 28
TGRC30S12 ... 28
TGRC40 ... 28
TGRC40S10 ... 28
TGRC40S12 ... 28
TGRC40S14 ... 28
TGRC50S12 ... 28
TGRC50S14 ... 28
TGRC50S17 ... 28
TGRC60S12 ... 28
TGRC60S14 ... 28
TGRC60S17 ... 28
TGRC80S12 ... 28
TGRC80S14 ... 28
TGRC80S17 ... 28
TGRC100S12 ... 28
TGRC100S14 ... 28
TGRC100S17 ... 28
TGRC150S14 ... 28
TK6 ... 106
TKPN50BE ... 27
TKPN60BE ... 27
TKPN80BE ... 27
TKPN100BE ... 27
TKPN125BE ... 27
TKPN150BE ... 27
TKPN200BE ... 27
TKPN250BE ... 27
TKPN300BE ... 27
TL60 ... 157
TL90 ... 157
TL120 ... 157
TL180 ... 157
TMS ... 173
TP-1 ... 71
TP-1F ... 71
TP-1F-RK ... 71
TP-1K ... 72
TP-2F ... 71
TP-2F-RK ... 71
TP100S12BE ... 26
TP100S12BE-2K ... 25
TP100S14BE ... 26
TP100S17BE ... 26
TP125S12BE ... 26
TP150S12BE ... 26
TP150S14BE ... 26
TP200S14BE ... 26
TPN10BE ... 26
TPN12BE ... 26
TPN15B5BE ... 26
TPN16BE ... 26
TPN16BE-2K ... 25
TPN20B5BE ... 26
TPN20B6BE ... 26
TPN20B8BE ... 26
TPN20BE ... 26
TPN20BE-2K ... 25
TPN25B8BE ... 26
TPN25BE ... 26
TPN25BE-2K ... 25
TPN25S10BE ... 26
TPN30B8BE ... 26
TPN30BE ... 26
TPN30BE-2K ... 25
TPN30S10BE ... 26
TPN30S12BE ... 26
TPN40BE ... 26
TPN40BE-2K ... 25
TPN40S10BE ... 26
TPN40S12BE ... 26
TPN40S12BE-2K ... 25
TPN40S14BE ... 26
TPN50S12BE ... 26
TPN50S12BE-2K ... 25
TPN50S14BE ... 26
TPN60S12BE ... 26
TPN60S12BE-2K ... 25
TPN60S14BE ... 26
TPN60S17BE ... 26
TPN80S12BE ... 26
TPN80S12BE-2K ... 25
TPN80S14BE ... 26
TPN80S17BE ... 26
TU ... 171
TU-TRAGE ... 171
TUX ... 172
TW16-20-10-2K ... 77,148
TW16-20-10H ... 77,148
TW16-20-10K ... 77,148
TW16A-STC ... 80,94
TW16AW19 ... 149
TW16AW20 ... 149
TW16AW30 ... 149
TW16VAD ... 80
TW16X ... 81,95
TW20-15-8KLI-SET ... 152
TW22-20-10-2K ... 77,148
TW28-30-12-2K ... 77
TW28-30-12H ... 77
TW28-30-12K ... 77
TW28-30-14-2K ... 77
TW28-30-14H ... 77
TW28-30-14K ... 77
TW28A-STC ... 80,94
TW28AV ... 81
TW28GRS30-12 ... 79
TW28VAD ... 80
TW28X ... 81,95
TWM28-30-12 ... 78
TWV16-20-15-2K ... 76,147
TWV16-20-15H ... 76,147
TWV16-20-15K ... 76,147
TWV28-30-17-2K ... 76
TWV28-30-17H ... 76
TWV28-30-17K ... 76
TWVAD ... 80

U

UK16 ... 107
UK30 ... 107
UK60 ... 107
UK80 ... 107
UK100 ... 107

V

VC2 ... 65
VC3 ... 65
VC4 ... 65
VC6 ... 65
VC8 ... 65
VC10 ... 65

W

WNS-SET-MFT ... 151
WS1 ... 142
WS3 ... 141
WS6 ... 141
WSM9 ... 74
WSM12 ... 74
WTR ... 173

X

XC1 ... 129
XC1-SET ... 129
XC2 ... 129
XC3 ... 129
XC5 ... 129
XC7 ... 129
XCL2 ... 129
XCL2-SET ... 129
XCL5 ... 129
XCR2 ... 130
XCR4 ... 130
XM3EU ... 130
XM5EU ... 130
XM7EU ... 130
XV3-50 ... 128
XV5-100 ... 128
XV5-170 ... 128

Z

ZW1 ... 181
ZW1-A01 ... 181
ZW1-A01-2K ... 181
ZW1-A99-2K ... 181
ZW2 ... 181
ZW2-A99 ... 181
ZW2-A99-2K ... 181

SIMPLY BETTER.

OUR TRADITION.

BESSEY is the inventor of the screw clamp as it is known in the world today. A starting point for a success story that continues. With hundreds of patents and even more product innovations, we influence the working methods of people and markets – today and tomorrow. This innovative strength is ever-present in the company: advanced sales, worldwide availability and efficient production steps are the result of an inventive spirit that has always been part of the company – always and everywhere.

»Those who stop getting better have stopped being good.«

Max Bessey

1889 – 2024

135

BESSEY

Patent Bessey
25

SIMPLY BETTER.

OUR VALUES.

We have always had a very special concept of sustainability. An understanding that does not stop at ecology but makes it a driving force. This includes products that last forever and product systems that develop from individual products. As a precaution, we also take care of our partners, suppliers and users. We support our employees in their development and realisation – and are rewarded with loyalty. A precautionary and sustainable approach is an ideal that we cultivate out of tradition. We rely on a diverse team and thus promote the exchange of knowledge and experience. This is how we create a working environment in which diversity makes us creative, flexible and successful.

MADE
IN
GERMANY
MADE
BY
VIELFALT

SIMPLY BETTER.

OUR SKILLS.

Manufacturing expertise is production expertise. BESSEY is aware of its special position in terms of quality and has the means to maintain this special position in the future. The decisive quality advantages result from the fact that we purchase rail and spindle material from our own company – via BESSEY Präzisionsstahl GmbH. All manufacturing steps that have an impact on quality and value are performed either directly at BESSEY in Bietigheim-Bissingen or in our own facilities at extended workbenches. And when it comes to components from other manufacturers, our quality assurance is omnipresent – always in person. With our own development, engineering and toolmaking, we ensure that the technology and knowledge always remain the property of and are the responsibility of BESSEY. At the end of the day, the BESSEY logo – and with it the brand promise – is only applied to products that fulfil all quality characteristics without exception.

Our research and development is a kind of think tank in itself, a production site for ever new product innovations and systemic extensions. Numerous protective registrations (patents, utility models, design patents and trademarks) for our clamping and cutting tools are the unparalleled result of intensive development work. This is how innovations are protected from the competition and the BESSEY product world remains a market leader.

BESSEY
Imagemovie

OUR WORLD.

BESSEY is known among users worldwide as THE innovator and 'work facilitator'. The reason for this is also here in the attitude of the company – to always be one step closer to the user than the competition. Closer is better, and at BESSEY, proximity to the user is part of the DNA. That is why the BESSEY range is depth, unique worldwide. It is based on the close cooperation between developers and users and constant improvements, which in some cases lead to highly customised solutions. And it is precisely from these experiences that the BESSEY system concept was developed. The variability and compatibility of the products enables users from all trades to find customised solutions that lead to optimal work results.

WOOD
METAL
INDUSTRY
CONSTRUCTION
DIY

CLAMPING TOOLS.

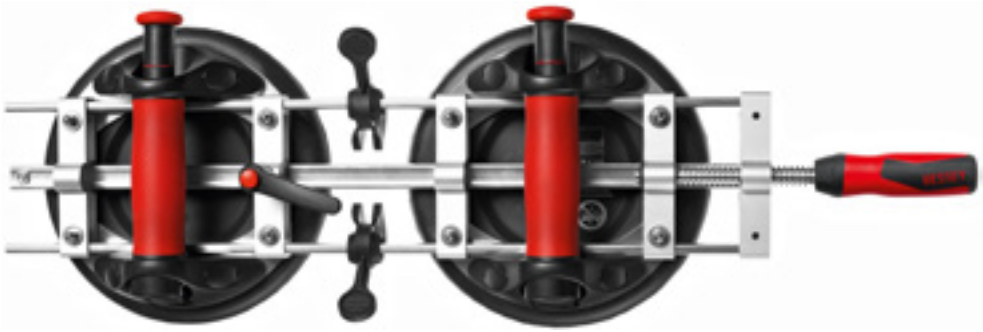

BESSEY's drive for innovation was already evident in the 1930s, when we started producing manual clamping tools with the development of the malleable cast iron screw clamp – the first so called F-clamp. This pioneering invention laid the foundation for BESSEY's success today. Today, we offer an incomparably wide and deep range of clamping tools, from specialized solutions for the wood and metal sector to practical tools for use in industry, construction and DIY. BESSEY makes work easier through continuous development and adaptation to the needs of professionals and DIY enthusiasts. Comfort, safety and robustness are the key criteria that characterize each of our quality tools.

Powerful and rigid tensioning

BELONGS IN EVERY WOODWORKING SHOP

Malleable cast iron clamps have cast clamping brackets that are tempered. In the case of cast iron, tempering refers to long-term annealing at temperatures between 700 °C and 1050 °C to improve the mechanical properties (strength, toughness). The result is malleable cast iron. This makes the clamp unyielding and ideal for applications that require powerful and rigid clamping, e.g. when gluing solid wood. A few turns of the spindle allow the clamping force to be built up quickly. The user immediately feels the resistance and therefore knows exactly how much more the clamp needs to be tightened to ensure that it is firmly seated. BESSEY offers an extremely wide range of malleable cast iron clamps. These include the unrivaled classic since 1936: the original malleable cast iron TG screw clamp with shaft-reinforced clamping arms, unique hollow profile rail made of BESSEY quality steel and integrated anti-slip protection for maximum safety.

Original BESSEY malleable cast iron screw clamp TG with 2-component plastic handle

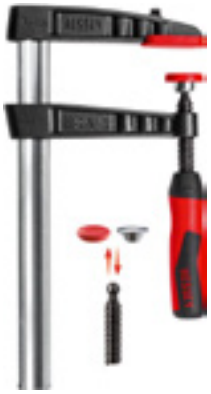

- Clamping force up to 6,000 N
- High-quality 2-component plastic handle
- Pressure plates can be replace by hand – no tools required (from 80 mm throat depth)
- With protective caps on the clamping surfaces
- Stable profiled rail with serration
- BESSEY anti-slip system (from 80 mm throat depth)

Order number	Opening	Throat depth	Rail	Weight
	mm	mm	mm	kg
TG10-2K	100	50	15x5	0.260
TG12-2K	120	60	20x5	0.423
TG16-2K	160	80	25x6	0.655
TG20B8-2K	200	80	25x6	0.770
TG25B8-2K	250	80	25x6	0.820
TG30B8-2K	300	80	25x6	0.870
TG40B8-2K	400	80	25x6	0.970
TG20-2K	200	100	27x7	1.055
TG25S10-2K	250	100	27x7	1.145
TG30S10-2K	300	100	27x7	1.180
TG40S10-2K	400	100	27x7	1.330
TG50S10-2K	500	100	27x7	1.460
TG25-2K	250	120	29x9	1.535
TG30S12-2K	300	120	29x9	1.625
TG40S12-2K	400	120	29x9	1.780
TG50S12-2K	500	120	29x9	1.980
TG60S12-2K	600	120	29x9	2.130
TG80S12-2K	800	120	29x9	2.460
TG100S12-2K	1000	120	29x9	2.825
TG30-2K	300	140	32x10	2.195
TG40S14-2K	400	140	32x10	2.405
TG50S14-2K	500	140	32x10	2.615
TG60S14-2K	600	140	32x10	2.845
TG80S14-2K	800	140	32x10	3.290
TG100S14-2K	1000	140	32x10	3.705
TG40-2K	400	175	32x10	2.700
TG50S17-2K	500	175	32x10	2.900
TG60S17-2K	600	175	32x10	3.160
TG80S17-2K	800	175	32x10	3.500
TG100S17-2K	1000	175	32x10	4.000

Heavy duty malleable cast iron screw clamp TGK with 2-component plastic handle

- Clamping force up to 7,000 N
- Strengthened design for higher clamping force and wider opening widths
- High-quality 2-component plastic handle
- Pressure plates can be replaced by hand – no tools required
- Stable profiled rail with serration
- BESSEY anti-slip system

Order number	Opening	Throat depth	Rail	Weight
	mm	mm	mm	kg
TGK40-2K	400	120	35x11	2.520
TGK50-2K	500	120	35x11	2.700
TGK60-2K	600	120	35x11	2.995
TGK80-2K	800	120	35x11	3.525
TGK100-2K	1000	120	35x11	4.000
TGK125-2K	1250	120	35x11	4.480
TGK150-2K	1500	120	35x11	5.305
TGK200-2K	2000	120	35x11	6.655
TGK250-2K	2500	120	35x11	7.930
TGK300-2K	3000	120	35x11	9.197

Original BESSEY malleable cast iron screw clamp TG with tried-and-true wooden handle

- Clamping force up to 6,000 N
- Ergonomically shaped wood handle
- Pressure plates can be replaced by hand – no tools required (from 80 mm throat depth)
- With protective caps on the clamping surfaces
- Stable profiled rail with serration
- BESSEY anti-slip system (from 80 mm throat depth)

Order number	Opening	Throat depth	Rail	Weight
	mm	mm	mm	kg
TG10	100	50	15x5	0.260
TG15B5	150	50	15x5	0.290
TG20B5	200	50	15x5	0.310
TG12	120	60	20x5	0.423
TG20B6	200	60	20x5	0.473
TG30B6	300	60	20x5	0.544
TG16	160	80	25x6	0.655
TG20B8	200	80	25x6	0.770
TG25B8	250	80	25x6	0.820
TG30B8	300	80	25x6	0.870
TG40B8	400	80	25x6	0.970
TG20	200	100	27x7	1.070
TG25S10	250	100	27x7	1.120
TG30S10	300	100	27x7	1.180
TG40S10	400	100	27x7	1.330
TG50S10	500	100	27x7	1.444
TG25	250	120	29x9	1.535
TG30S12	300	120	29x9	1.590
TG40S12	400	120	29x9	1.780
TG50S12	500	120	29x9	1.950
TG60S12	600	120	29x9	2.111
TG80S12	800	120	29x9	2.460
TG100S12	1000	120	29x9	2.797
TG30	300	140	32x10	2.196
TG40S14	400	140	32x10	2.405
TG50S14	500	140	32x10	2.615
TG60S14	600	140	32x10	2.845
TG80S14	800	140	32x10	3.265
TG100S14	1000	140	32x10	3.683
TG40	400	175	32x10	2.670
TG50S17	500	175	32x10	2.881
TG60S17	600	175	32x10	3.100
TG80S17	800	175	32x10	3.500
TG100S17	1000	175	32x10	3.950

Heavy duty malleable cast iron screw clamp TGK with tried-and-true wooden handle

- Clamping force up to 7,000 N
- Heavy duty, reinforced design for higher clamping force and wider opening widths
- Ergonomically shaped wood handle
- Pressure plates can be replaced by hand – no tools required
- Stable profiled rail with serration
- BESSEY anti-slip system

Order number	Opening	Throat depth	Rail	Weight
	mm	mm	mm	kg
TGK40	400	120	35x11	2.480
TGK50	500	120	35x11	2.700
TGK60	600	120	35x11	2.995
TGK80	800	120	35x11	3.490
TGK100	1000	120	35x11	4.000
TGK125	1250	120	35x11	4.540
TGK150	1500	120	35x11	5.230
TGK200	2000	120	35x11	6.650
TGK250	2500	120	35x11	7.800
TGK300	3000	120	35x11	9.170

Original BESSEY malleable cast iron screw clamp TG with tommy bar

- Clamping force up to 6,000 N
- Tommy bar with rounded ends for simple transfer of force when clamping
- Pressure plates can be replaced by hand – no tools required
- With protective caps on the clamping surfaces
- Stable profiled rail with serration
- BESSEY anti-slip system

Order number	Opening	Throat depth	Rail	Weight
	mm	mm	mm	kg
TG20K	200	100	27x7	1.053
TG25K	250	120	29x9	1.480
TG40S12K	400	120	29x9	1.740
TG30K	300	140	32x10	2.100
TG40K	400	175	32x10	2.620

Heavy duty malleable cast iron screw clamp TGK with tommy bar

- Clamping force up to 7,000 N
- Strengthened design for higher clamping force and wider opening widths
- Tommy bar with rounded ends for simple transfer of force when clamping
- Pressure plates can be replaced by hand – no tools required
- Stable profiled rail with serration
- BESSEY anti-slip system

Order number	Opening	Throat depth	Rail	Weight
	mm	mm	mm	kg
TGK50K	500	120	35x11	2.660
TGK100K	1000	120	35x11	3.940
TGK150K	1500	120	35x11	5.230
TGK200K	2000	120	35x11	6.500
TGK250K	2500	120	35x11	7.814
TGK300K	3000	120	35x11	9.099

Malleable cast iron screw clamp TPN with 2-component plastic handle

- Clamping force up to 5,500 N
- High-quality 2-component plastic handle
- With protective caps on the clamping surfaces
- Stable profiled rail with serration

Order number	Opening	Throat depth	Rail	Weight
	mm	mm	mm	kg
TPN16BE-2K	160	80	25x6	0.730
TPN20BE-2K	200	100	27x7	1.060
TPN25BE-2K	250	120	29x9	1.500
TPN40S12BE-2K	400	120	29x9	1.740
TPN50S12BE-2K	500	120	29x9	2.000
TPN60S12BE-2K	600	120	29x9	2.100
TPN80S12BE-2K	800	120	29x9	2.500
TP100S12BE-2K	1000	120	29x9	2.800
TPN30BE-2K	300	140	32x10	2.030
TPN40BE-2K	400	175	32x10	2.610

Malleable cast iron screw clamp TPN with tried-and-true wooden handle

- Clamping force up to 5,500 N
- Ergonomically shaped wood handle
- With protective caps on the clamping surfaces
- Stable profiled rail with serration

Order number	Opening	Throat depth	Rail	Weight
	mm	mm	mm	kg
TPN10BE	100	50	15x5	0.260
TPN15B5BE	150	50	15x5	0.290
TPN20B5BE	200	50	15x5	0.310
TPN12BE	120	60	20x5	0.400
TPN20B6BE	200	60	20x5	0.450
TPN16BE	160	80	25x6	0.730
TPN20B8BE	200	80	25x6	0.770
TPN25B8BE	250	80	25x6	0.815
TPN30B8BE	300	80	25x6	0.870
TPN20BE	200	100	27x7	1.158
TPN25S10BE	250	100	27x7	1.230
TPN30S10BE	300	100	27x7	1.294
TPN40S10BE	400	100	27x7	1.413
TPN25BE	250	120	29x9	1.490
TPN30S12BE	300	120	29x9	1.578
TPN40S12BE	400	120	29x9	1.747
TPN50S12BE	500	120	29x9	1.920
TPN60S12BE	600	120	29x9	2.070
TPN80S12BE	800	120	29x9	2.446
TP100S12BE	1000	120	29x9	2.780
TP125S12BE	1250	120	29x9	3.200
TP150S12BE	1500	120	29x9	3.660
TPN30BE	300	140	32x10	2.030
TPN40S14BE	400	140	32x10	2.300
TPN50S14BE	500	140	32x10	2.480
TPN60S14BE	600	140	32x10	2.660
TPN80S14BE	800	140	32x10	3.120
TP100S14BE	1000	140	32x10	3.590
TP150S14BE	1500	140	32x10	4.680
TP200S14BE	2000	140	32x10	5.738
TPN40BE	400	175	32x10	2.580
TPN60S17BE	600	175	32x10	3.020
TPN80S17BE	800	175	32x10	3.440
TP100S17BE	1000	175	32x10	3.850

Heavy duty malleable cast iron screw clamp TKPN with tried-and-true wooden handle

- Clamping force up to 6,500 N
- Strengthened design for higher clamping force and wider opening widths
- Ergonomically shaped wood handle
- Stable profiled rail with serration

Order number	Opening	Throat depth	Rail	Weight
	mm	mm	mm	kg
TKPN50BE	500	120	35x11	2.210
TKPN60BE	600	120	35x11	2.970
TKPN80BE	800	120	35x11	3.480
TKPN100BE	1000	120	35x11	4.050
TKPN125BE	1250	120	35x11	4.650
TKPN150BE	1500	120	35x11	5.340
TKPN200BE	2000	120	35x11	6.670
TKPN250BE	2500	120	35x11	7.960
TKPN300BE	3000	120	35x11	9.200

Malleable cast iron screw clamp TGRC with tried-and-true wooden handle

- Clamping force up to 5,500 N
- Ergonomically shaped wood handle
- With protective caps on the clamping surfaces
- Stable solid flat rail with serration

Order number	Opening	Throat depth	Rail	Weight
	mm	mm	mm	kg
TGRC10	100	50	15x5	0.260
TGRC15B5	150	50	15x5	0.290
TGRC20B5	200	50	15x5	0.310
TGRC12	120	60	20x5	0.420
TGRC20B6	200	60	20x5	0.490
TGRC30B6	300	60	20x5	0.560
TGRC16	160	80	25x6	0.730
TGRC20B8	200	80	25x6	0.770
TGRC25B8	250	80	25x6	0.820
TGRC30B8	300	80	25x6	0.870
TGRC20	200	100	27x7	1.190
TGRC25S10	250	100	27x7	1.281
TGRC30S10	300	100	27x7	1.330
TGRC40S10	400	100	27x7	1.430
TGRC25	250	120	29x9	1.535
TGRC30S12	300	120	29x9	1.630
TGRC40S12	400	120	29x9	1.802
TGRC50S12	500	120	29x9	2.048
TGRC60S12	600	120	29x9	2.236
TGRC80S12	800	120	29x9	2.620
TGRC100S12	1000	120	29x9	2.849
TGRC30	300	140	32x10	2.100
TGRC40S14	400	140	32x10	2.400
TGRC50S14	500	140	32x10	2.240
TGRC60S14	600	140	32x10	2.895
TGRC80S14	800	140	32x10	3.380
TGRC100S14	1000	140	32x10	3.780
TGRC150S14	1500	140	32x10	5.020
TGRC40	400	175	32x10	2.665
TGRC50S17	500	175	32x10	2.930
TGRC60S17	600	175	32x10	3.165
TGRC80S17	800	175	32x10	3.500
TGRC100S17	1000	175	32x10	4.000

Heavy duty malleable cast iron screw clamp TGKR with tried-and-true wooden handle

- Clamping force up to 6,500 N
- Strengthened design for higher clamping force and wider opening widths
- Ergonomically shaped wood handle
- Stable solid flat rail with serration

Order number	Opening	Throat depth	Rail	Weight
	mm	mm	mm	kg
TGKR50	500	120	35x11	2.700
TGKR60	600	120	35x11	2.900
TGKR80	800	120	35x11	3.500
TGKR100	1000	120	35x11	4.000
TGKR125	1250	120	35x11	4.700
TGKR150	1500	120	35x11	5.200
TGKR200	2000	120	35x11	6.500

Deep throat clamp TGNT with tried-and-true wooden handle

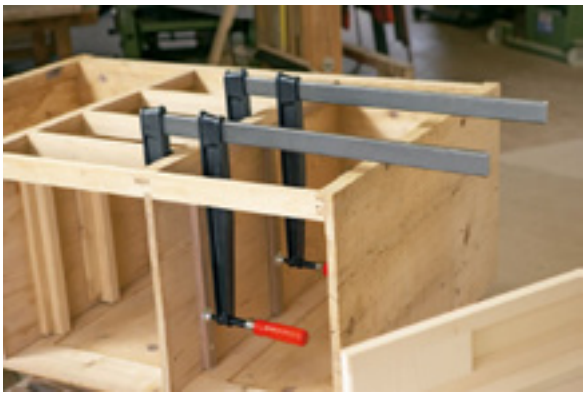

- Clamping force up to 7,000 N
- Heavy-duty design
- Ergonomically shaped wood handle
- Large, stable solid flat rail with serration
- Rail dimensions great than and equal to 40 x 11 are ungalvanized

Order number	Opening	Throat depth	Rail	Weight
	mm	mm	mm	kg
TGN30T20	300	200	35x11	3.110
TGN40T20	400	200	35x11	3.360
TGN60T20	600	200	35x11	3.910
TGN80T20	800	200	35x11	4.480
TGN100T20	1000	200	35x11	4.650
TGN40T25	400	250	40x11	4.420
TGN60T25	600	250	40x11	5.055
TGN80T25	800	250	40x11	5.710
TGN100T25	1000	250	40x11	6.340
TGN40T30	400	300	45x12	5.550
TGN60T30	600	300	45x12	6.310
TGN80T30	800	300	45x12	7.110
TGN100T30	1000	300	45x12	7.940
TGN150T30	1500	300	45x12	10.000
TGN200T30	2000	300	45x12	11.970
TGN250T30	2500	300	45x12	13.960
TGN40T40	400	400	45x12	6.700
TGN60T40	600	400	45x12	7.450
TGN80T40	800	400	45x12	8.270
TGN100T40	1000	400	45x12	9.220
TGN30T50	300	500	45x12	7.970
TGN60T50	600	500	45x12	9.170
TGN80T50	800	500	45x12	9.960

Deep throat screw clamp TGNT with tommy bar

- Clamping force up to 7,000 N
- Heavy-duty design
- Tommy bar with rounded ends for simple transfer of force when clamping
- Large, stable solid plain rail with fluting
- Rail dimensions great than and equal to 40 x 11 are ungalvanized

Order number	Opening	Throat depth	Rail	Weight
	mm	mm	mm	kg
TGN30T20K	300	200	35x11	3.000
TGN40T20K	400	200	35x11	3.205
TGN40T25K	400	250	40x11	4.355
TGN60T25K	600	250	40x11	4.980
TGN80T25K	800	250	40x11	5.640
TGN40T30K	400	300	45x12	5.480
TGN60T30K	600	300	45x12	6.230
TGN80T30K	800	300	45x12	7.060
TGN40T40K	400	400	45x12	5.500
TGN60T40K	600	400	45x12	7.390
TGN80T40K	800	400	45x12	8.190
TGN30T50K	300	500	45x12	7.870
TGN60T50K	600	500	45x12	9.100
TGN80T50K	800	500	45x12	9.910

Springy, elastic and powerful tensioning

FOR WOOD AND METAL APPLICATIONS ALIKE

In all-steel clamps, the fixed bracket with moulded pressure plate is forged from a single piece, tempered and galvanized. This gives the clamp its special resilient and elastic properties. Compared to rigidly clamping malleable cast iron clamps, the spindle can be turned more often to achieve the required clamping force. All-steel screw clamps are also less sensitive to vibrations. They are therefore indispensable aids for a wide range of applications in wood and metal processing. Since the patent for the hardened and tempered BESSEY all-steel clamp was granted in 1952, it has been the model for many other innovative clamping tools from BESSEY. These include lever and high-performance clamps as well as other special all-steel screw clamps: One is the Omega screw clamp GMZ, which offers maximum elasticity and safety, and the other is the KombiKlamp SG-VAD, which fixes round, oval and angled workpieces easily and securely with its clamping attachment.

Original BESSEY all-steel screw clamp GZ with 2-component plastic handle

- 20 % more clamping force per spindle rotation with optimised rail profile
- Maximum security with linear transfer of force at the sliding arm
- Clamping force up to 6,000 N
- Fixed jaw and sliding arm are constructed of tempered steel for resilient clamping
- High-quality 2-component plastic handle
- Pressure plates can be replaced by hand – no need for tools (from 80 mm width)

Order number	Opening	Throat depth	Rail	Weight
	mm	mm	mm	kg
GZ10-2K	100	60	15x6	0.308
GZ12-2K	120	60	15x6	0.320
GZ16-2K	160	80	17.5x6.8	0.565
GZ40-8-2K	400	80	17.5x6.8	0.760
GZ20-2K	200	100	22x8.5	1.005
GZ25-2K	250	120	24.5x9.5	1.380
GZ30-12-2K	300	120	24.5x9.5	1.460
GZ40-12-2K	400	120	24.5x9.5	1.623
GZ50-12-2K	500	120	24.5x9.5	1.780
GZ60-12-2K	600	120	24.5x9.5	1.950
GZ80-12-2K	800	120	24.5x9.5	2.200
GZ100-12-2K	1000	120	24.5x9.5	2.450
GZ30-2K	300	140	28x11	1.982
GZ40-2K	400	120	28x11	2.122
GZ50-2K	500	120	28x11	2.295
GZ60-2K	600	120	28x11	2.490
GZ80-2K	800	120	28x11	2.360
GZ100-2K	1000	120	28x11	3.250
GZ125-2K	1250	120	28x11	3.790

Original BESSEY all-steel screw clamp GZ with tried-and-tested wooden handle

- 20 % more clamping force per spindle rotation with optimised rail profile
- Maximum security with linear transfer of force at the sliding arm
- Clamping force up to 6,000 N
- Fixed jaw and sliding arm are constructed of tempered steel for resilient clamping
- Ergonomically shaped wood handle
- Pressure plates can be replaced by hand – no need for tools (from 80 mm width)

Order number	Opening	Throat depth	Rail	Weight
	mm	mm	mm	kg
GZ10	100	60	15x6	0.298
GZ12	120	60	15x6	0.311
GZ30-6	300	60	15x6	0.420
GZ16	160	80	17.5x6.8	0.516
GZ20	200	100	22x8.5	0.949
GZ30-10	300	100	22x8.5	1.090
GZ25	250	120	24.5x9.5	1.341
GZ30-12	300	120	24.5x9.5	1.403
GZ40-12	400	120	24.5x9.5	1.560
GZ30	300	140	28x11	1.956
GZ40	400	120	28x11	2.043
GZ50	500	120	28x11	2.269
GZ60	600	120	28x11	2.473
GZ80	800	120	28x11	2.815
GZ100	1000	120	28x11	3.224
GZ125	1250	120	28x11	3.747

Original BESSEY all-steel screw clamp GZ with tommy bar

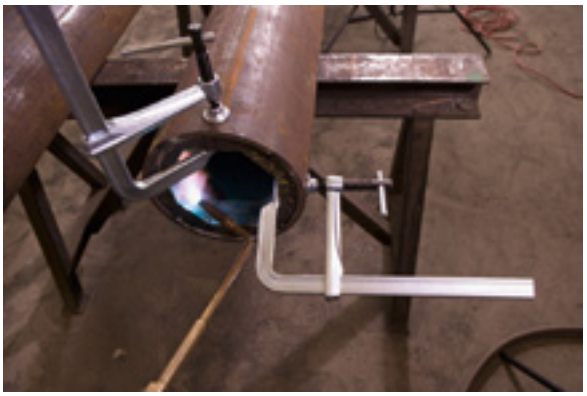

- 20 % more clamping force per spindle rotation with optimised rail profile
- Maximum security with linear transfer of force at the sliding arm
- Clamping force up to 6,000 N
- Fixed jaw and sliding arm are constructed of tempered steel for resilient clamping
- Tommy bar with rounded ends for simple transfer of force when clamping
- Pressure plates can be replaced by hand – no need for tools

Order number	Opening	Throat depth	Rail	Weight
	mm	mm	mm	kg
GZ16K	160	80	17.5x6.8	0.497
GZ20K	200	100	22x8.5	0.932
GZ25K	250	120	24.5x9.5	1.306
GZ30K	300	140	28x11	1.891
GZ40K	400	120	28x11	1.998
GZ50K	500	120	28x11	2.203
GZ60K	600	120	28x11	2.400
GZ80K	800	120	28x11	2.760
GZ100K	1000	120	28x11	3.182
GZ125K	1250	120	28x11	3.650

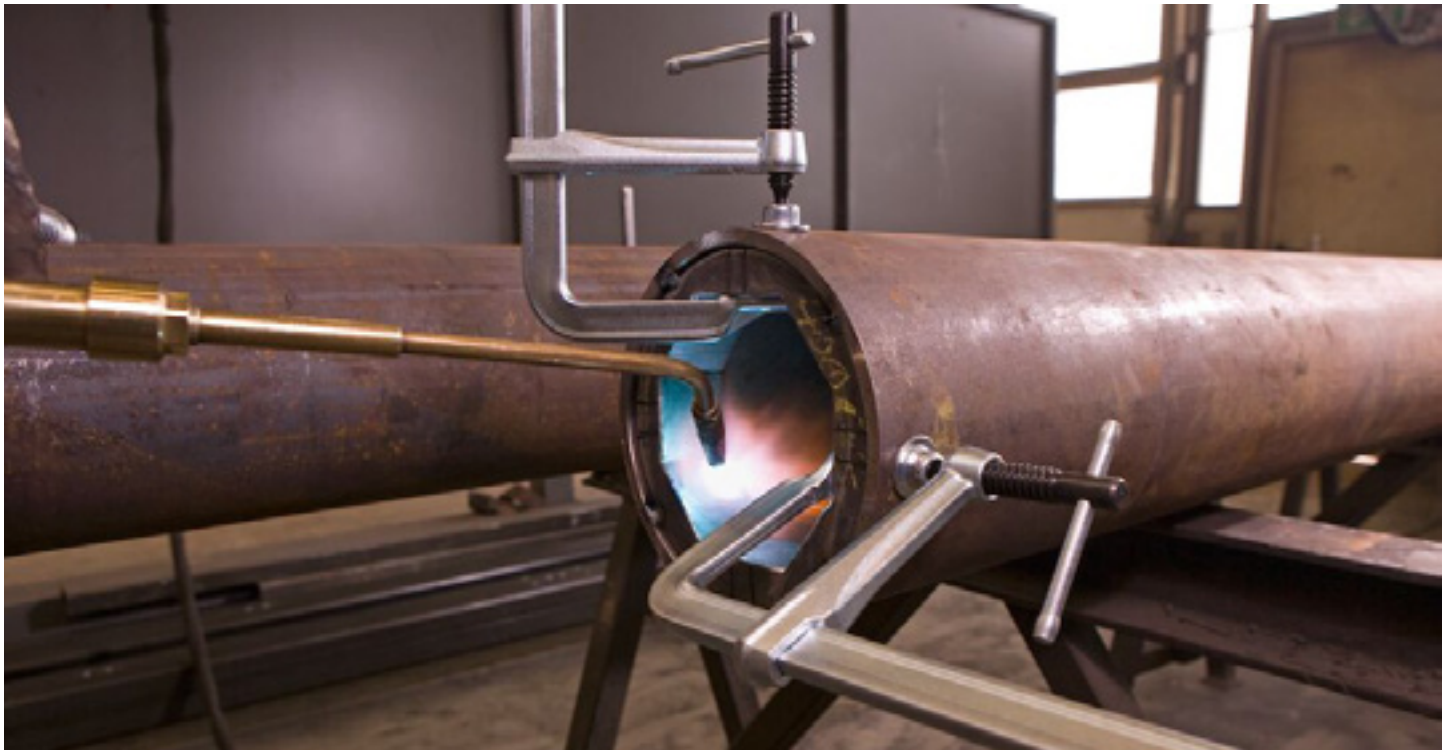

With 90° for more flexibility in no time at all

POWERFUL, FAST AND COMFORTABLE

The special two-component plastic handle offers not only ergonomic comfort but also other benefits:

- can be folded through 90°, creating additional leverage when tightening – and thus requiring less effort from the user
- can be rotated 360° when folded, so the user does not get stuck on the rail during the tensioning process and can therefore tension faster than with other competitor models
- in hard-to-reach places, the „disturbing“ handle can simply be folded away

FLEXIBLE AND HIGHLY STABLE

The other components of the new GZ version also impress with the usual high BESSEY quality:

- the special springy feature of the all-steel screw clamp is achieved thanks to the fixed bracket, forged out of one piece, tempered and galvanised, with a shaped pressure plate. The advantages: On the one hand, the pressure can be perfectly matched to the requirements of the workpiece. On the other hand, all-steel screw clamps are less sensitive to vibrations, which is why the clamps do not have to be tightened as quickly
- thanks to the forged sliding bracket

Original BESSEY all-steel screw clamp GZ with swivel handle

- Clamping force up to 5,000 N
- Fixed jaw and sliding arm are constructed of tempered steel for resilient clamping
- High-quality 2-component plastic handle
- Swivel handle can be folded 90° and rotated 360° without obstruction – even in areas that are difficult to reach
- Pressure plates can be replaced by hand – no need for tools

Order number	Opening	Throat depth	Rail	Weight
	mm	mm	mm	kg
GZ25KG	250	120	24.5x9.5	1.420
GZ30-12KG	300	120	24.5x9.5	1.500
GZ40-12KG	400	120	24.5x9.5	1.690
GZ50-12KG	500	120	24.5x9.5	1.820
GZ60-12KG	600	120	24.5x9.5	1.990

All-steel screw clamp classiX GS with tried-and-tested wooden handle

- Clamping force up to 5,000 N
- Fixed jaw and sliding arm are constructed of tempered steel for resilient clamping
- Ergonomically shaped wood handle

Order number	Opening	Throat depth	Rail	Weight
	mm	mm	mm	kg
GS10	100	50	11.5x5.6	0.200
GS12	120	60	13.5x6.5	0.300
GS16	160	80	16x7.5	0.480
GS20	200	100	19.5x9.5	0.830
GS25	250	120	22x10.5	1.240
GS30	300	140	25x12	1.850
GS40	400	120	25x12	1.950
GS50	500	120	25x12	2.200
GS60	600	120	25x12	2.400
GS80	800	120	27x13	3.170
GS100	1000	120	27x13	3.600

All-steel screw clamp classiX GS with tommy bar

- Clamping force up to 5,000 N
- Fixed jaw and sliding arm are constructed of tempered steel for resilient clamping
- Tommy bar with rounded ends for simple transfer of force when clamping

Order number	Opening	Throat depth	Rail	Weight
	mm	mm	mm	kg
GS16K	160	80	16x7.5	0.460
GS20K	200	100	19.5x9.5	0.830
GS25K	250	120	22x10.5	1.200
GS30K	300	140	25x12	1.790
GS40K	400	120	25x12	1.950
GS50K	500	120	25x12	2.165
GS60K	600	120	25x12	2.370
GS80K	800	120	27x13	3.105
GS100K	1000	120	27x13	3.580

Comparison of the first and second line on Original BESSEY all-steel screw clamps

	Original BESSEY all-steel screw clamps				classiX	
Order no.	GZ...2K	GZ...	GZ...K	GZ...KG	GS	GS...K
Product range	+ + +	+ + +	+ + +	+ + +	+ +	+ +
Clamping width	100–1250 mm	100–1250 mm	160–1250 mm	250–600 mm	100–1000 mm	160–1000 mm
Throat depth	60–140 mm	60–140 mm	80–140 mm	120 mm	50–140 mm	80–140 mm
Optimised rail profile	✔	✔	✔	✔		
Clamping force up to	+ + + 6000 N	+ + + 6000 N	+ + + 6000 N	+ + + 5000 N	+ + 5000 N	+ + 5000 N
Changeable pressure plate	✔	✔	✔	✔		
Intellectual property rights	on rail, sliding arm, pressure plate and appearance					

OMEGA screw clamp GMZ with 2-component plastic handle

- Clamping force up to 5,000 N
- Fixed jaw with patented OMEGA bow for less clamping force loss
- Fixed jaw and sliding arm are constructed of tempered steel for resilient clamping
- High-quality 2-component plastic handle
- Pressure plates can be replaced with no need for tools

Order number	Opening	Throat depth	Rail	Weight
	mm	mm	mm	kg
GM16Z-2K	160	80	16x7.5	0.545
GM20Z-2K	200	100	19.5x9.5	0.940
GM25Z-2K	250	120	22x10.5	1.345
GM30Z-2K	300	140	25x12	1.905
GM40Z-2K	400	120	25x12	2.080
GM50Z-2K	500	120	25x12	2.285
GM60Z-2K	600	120	25x12	2.460

OMEGA-screw clamp GMZ with tommy bar

- Clamping force up to 5,000 N
- Fixed jaw with patented OMEGA bow for less clamping force loss
- Fixed jaw and sliding arm are constructed of tempered steel for resilient clamping
- Tommy bar with rounded ends for simple transfer of force when clamping
- Pressure plates can be replaced with no need for tools

Order number	Opening	Throat depth	Rail	Weight
	mm	mm	mm	kg
GM20ZK	200	100	19.5x9.5	0.880
GM25ZK	250	120	22x10.5	1.245
GM30ZK	300	140	25x12	1.835
GM50ZK	500	120	25x12	2.215
GM60ZK	600	120	25x12	2.420

KombiKlamp SG-VAD

- Clamping force up to 7,500 N
- Clamping and spreading of round, oval and angled workpieces
- Pressure plates can be replaced with no need for tools

Order number	Opening	Throat depth	Rail	Weight
	mm	mm	mm	kg
SG30VAD	300	120	30x15	2.950

Fast, safe, strong clamping with leverage forces

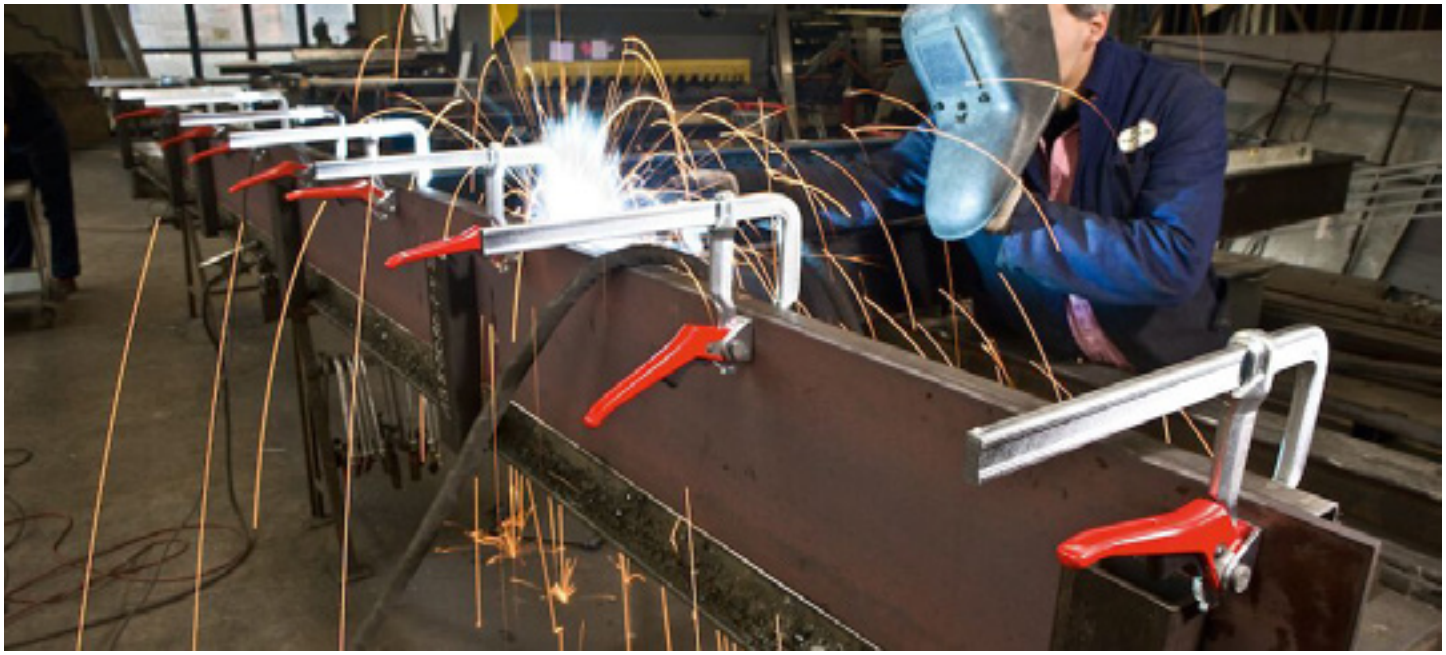

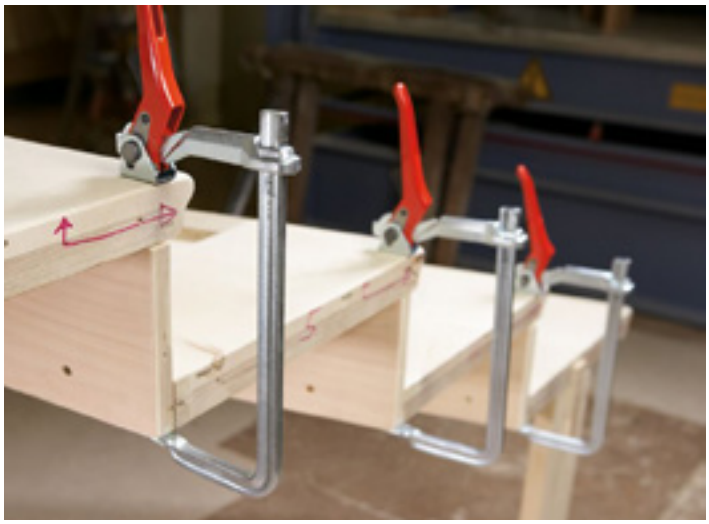

THE TURBOS UNDER THE CLAMPS

Lever clamps are particularly helpful when many clamps need to be set and released in the shortest possible time. The reason: BESSEY Lever clamps build up the clamping force in a controlled manner and up to 5 times faster. This is because the required clamping force is achieved quickly, safely and gently with little effort using the lever arm. The multi-stage locking mechanism also makes the lever clamps insensitive to vibrations and therefore a particularly safe clamping tool for all sawing, sanding or milling work. In addition to powerful all-steel lever clamps, BESSEY also offers a lighter version with clamping arms made of lightweight magnesium: the KliKlamp KLI high-tech lever clamp. It is particularly easy to handle and ideal for applications requiring light or medium clamping forces, such as assembly work.

Lever clamp GH

- Greater reserves of power, thanks to optimised rail profile, for even clamping force build-up, especially under maximum utilisation of the clamping range
- Non-slip trigger release
- Sintered steel cams – particularly hard-wearing, low friction due to higher surface hardness
- Quick – up to 5 x faster than regular clamps
- Secure – vibration resistant
- Strong – clamping force up to 8,500 N

Order number	Opening	Throat depth	Rail	Weight
	mm	mm	mm	kg
GH12	120	60	15x6	0.494
GH16	160	80	17.5x6.8	0.635
GH20-8	200	80	17.5x6.8	0.683
GH20	200	100	22x8.5	1.105
GH25	250	120	24.5x9.5	1.438
GH30-12	300	120	24.5x9.5	1.510
GH40-12	400	120	24.5x9.5	1.670
GH30	300	140	28x11	2.220
GH40	400	120	28x11	2.385
GH50	500	120	28x11	2.614
GH60	600	120	28x11	2.780
GH80	800	120	28x11	3.140
GH100	1000	120	28x11	3.570

Lever clamp SGHS, heavy duty

- Heavy design
- Rapid – up to 5 x faster than conventional clamps
- Secure – vibration resistant
- Strong – clamping force up to 9,500 N

Order number	Opening	Throat depth	Rail	Weight
	mm	mm	mm	kg
SG-25HS	300	140	30x15	3.050
SG-50HS	500	140	30x15	3.825

Lever clamp classiX GSH

- Non-slip trigger release
- Quick – up to 5 times faster than regular clamps
- Secure – unaffected by vibrations
- Strong – clamping force up to 7,500 N

Order number	Opening	Throat depth	Rail	Weight
	mm	mm	mm	kg
GSH12	120	60	13.5x6.5	0.494
GSH16	160	80	16x7.5	0.635
GSH20	200	100	19.5x9.5	1.080
GSH25	250	120	22x10.5	1.438
GSH30	300	140	25x12	2.223
GSH40	400	120	25x12	2.405
GSH50	500	120	25x12	2.585
GSH60	600	120	25x12	2.790

Comparison of the first and second line on BESSEY lever clamps

	BESSEY lever clamps	classiX
Order no.	GH	GSH
Product range	+ + +	+ +
Clamping width	120–1000 mm	120–600 mm
Throat depth	60–140 mm	60–140 mm
Optimised rail profile	✔	
Clamping force up to	+ + + 8500 N	+ + 7500 N
Intellectual property rights	on rail, sliding arm, pressure plate and appearance	

High-tech lever clamp KliKlamp KLI

- Clamping force up to 1,200 N
- Feather light yet ultra strong
- Sturdy fixed and sliding arms made from lightweight magnesium
- Quick and vibration free clamping

Order number	Opening	Throat depth	Rail	Weight
	mm	mm	mm	kg
KLI12	120	80	20x5	0.255
KLI16	160	80	20x5	0.285
KLI20	200	80	20x5	0.315
KLI25	250	80	20x5	0.350
KLI30	300	80	20x5	0.380
KLI40	400	80	20x5	0.445

High-tech lever clamp KliKlamp set in systainer KLI-S

- Practical systainer T-Loc, stackable
- Ideal for assembly work

Order number	Content	Weight
		kg
KLI-S	4 x KLI12 / 4 x KLI16 / 4 x KLI20 / 4 x KLI25	6.440

High-tech lever clamp KliKlamp counter display KLI-D

- Professional sales display
- Optimum presentation of the KliKlamp

Order number	Content	Weight
		kg
KLI-D	2 x KLI12 / 4 x KLI16 / 6 x KLI20 / 4 x KLI25	5.630

Tensioning with high performance

CLAMPING FORCES OF UP TO 35,000 N

Ever higher clamping forces with ever greater throat depths and longer openings. These are the requirements against which the original BESSEY High-performance clamps are measured on a daily basis. In steel, boiler, vehicle and ship construction. But also in heavy timber construction, glulam constructions or carpentry. In other words, wherever robust or heavy parts require special clamping forces and maximum safety. Developed on the basis of the tried and tested original BESSEY all-steel screw clamp, high-performance clamps from BESSEY meet all requirements easily.

Fitters‘ clamp SLM

- Clamping force up to 8,500 N at tightening torque of 25 Nm
- 20 % more clamping force per spindle rotation with optimised rail profile
- Maximum safety due to the better linear transfer of force of the sliding arm
- Long life due to heat-resistant pressure plate with sintered steel insert, which can be tilted up to 35°

Order number	Opening	Throat depth	Rail	Weight
	mm	mm	mm	kg
SL20M	200	120	28x11	1.810
SL25M	250	120	28x11	1.910
SL30M	300	120	28x11	2.000
SL40M	400	120	28x11	2.200
SL50M	500	120	28x11	2.410
SL60M	600	120	28x11	2.610

High-performance clamp SGM

- Clamping force up to 12,000 N at tightening torque of 40 Nm
- 20 % more clamping force per spindle rotation with optimised rail profile
- Maximum safety due to the better linear transfer of force of the sliding arm
- Long life due to heat-resistant pressure plate with sintered steel insert, which can be tilted up to 35°

Order number	Opening	Throat depth	Rail	Weight
	mm	mm	mm	kg
SG25M	250	140	34x13	2.575
SG30M	300	140	34x13	3.030
SG40M	400	140	34x13	3.165
SG50M	500	140	34x13	3.400
SG60M	600	140	34x13	3.800
SG80M	800	140	34x13	4.450
SG100M	1000	140	34x13	4.950
SG125M	1250	140	34x13	5.870
SG150M	1500	140	34x13	6.633

High-performance clamp SGTM, large throat depth

- Clamping force up to 8,500 N at tightening torque of 40 Nm
- Long life due to heat-resistant pressure plate with sintered steel insert, which can be tilted up to 35°
- Opening 200 mm

Order number	Opening	Throat depth	Rail	Weight
	mm	mm	mm	kg
SG30T20M	300	200	30x15	3.390
SG60T20M	600	200	30x15	4.300

High-performance clamp STBM

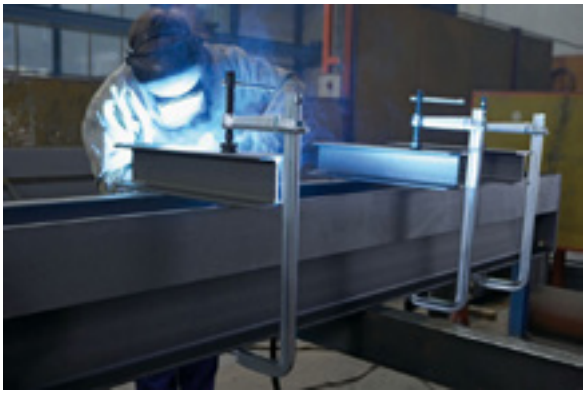

- Clamping force up to 22,000 N at tightening torque of 70 Nm
- Long life due to heat-resistant pressure plate with sintered steel insert, which can be tilted up to 35°
- With 19 mm hexagonal bolt on the end of the spindle

Order number	Opening	Throat depth	Rail	Weight
	mm	mm	mm	kg
STB30M	300	175	40x20	5.610
STB40M	400	175	40x20	6.100
STB50M	500	175	40x20	6.670
STB60M	600	175	40x20	7.230
STB80M	800	175	40x20	8.350
STB100M	1000	175	40x20	9.320
STB125M	1250	175	40x20	10.770
STB150M	1500	175	40x20	12.200

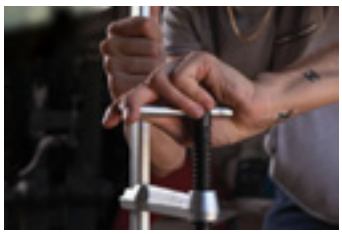

High-performance clamp STBS

- Clamping force up to 35,000 N at tightening torque of 100 Nm
- Long life due to heat-resistant pressure plate with sintered steel insert, which can be tilted up to 35°
- With 36 mm hexagonal bolt on the end of the spindle
- With wedge for fixing the sliding arm

Order number	Opening	Throat depth	Rail	Weight
	mm	mm	mm	kg
STBS30	300	200	50x25	10.460
STBS50	500	200	50x25	12.170
STBS100	1000	200	50x25	16.680

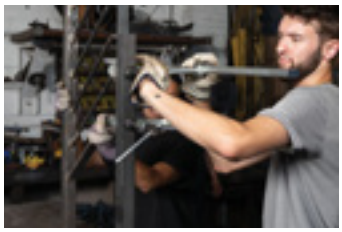

High-performance clamp STBVC

- Clamping force up to 35,000 N at tightening torque of 105 Nm
- Long life due to heat-resistant pressure plate with sintered steel insert, which can be tilted up to 35°
- With 19 mm hexagonal bolt on the end of the spindle
- With wedge for fixing the sliding arm

Order number	Opening	Throat depth	Rail	Weight
	mm	mm	mm	kg
STBVC15	150	100	40x20	4.060
STBVC25	250	100	40x20	4.615
STBVC35	350	100	40x20	5.130

Special pressure plate

- Long service life thanks to heat-resistant special pressure plate with sintered steel insert

Various designs:
- Smooth faced, standard version (can be swivelled up to 35°)
- Rough faced for secure clamping on dirty surfaces (can be swivelled up to 35°)
- V-groove face for round, oval and edged workpieces (can be swivelled up to 35°)
- Rigid design with smooth surface

Order number	Version	Suitable for	Weight
			kg
3100736	standard	SLM, SGM, SGTM, STBM, STBVC, SGU, SLV, GSV, SPZ80K, TWM	0.226
3102127	rigid	SLM, SGM, SGTM, STBM, STBVC, SGU, SLV, GSV, SPZ80K, TWM	0,223
3100737	standard	STBS, STBU	0.264
3101192	serrated	SLM, SGM, SGTM, STBM, STBVC, SGU, SLV, GSV, SPZ80K, TWM	0.180
3101193	v-grooved	SLM, SGM, SGTM, STBM, STBVC, SGU, SLV, GSV, SPZ80K, TWM	0.269

Fitters‘ clamp classiX GSL

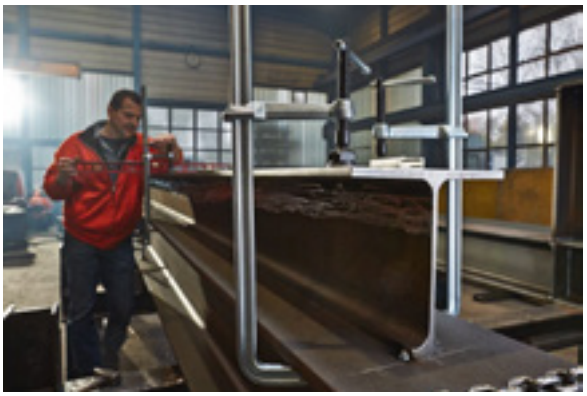

- Clamping force up to 7,500 N with a tightening torque of 25 Nm
- Special heat-resistant pressure plate, can be tilted by up to 35°

Order number	Opening	Throat depth	Rail	Weight
	mm	mm	mm	kg
GSL30	300	120	27x13	2.110
GSL60	600	120	27x13	2.820

High-performance clamp classiX GSM

- Clamping force up to 11,000 N with a tightening torque of 40 Nm
- Special heat-resistant pressure plate, can be tilted by up to 35°

Order number	Opening	Throat depth	Rail	Weight
	mm	mm	mm	kg
GSM25	250	140	30x15	2.575
GSM30	300	140	30x15	3.000
GSM40	400	140	30x15	3.165
GSM50	500	140	30x15	3.400
GSM60	600	140	30x15	3.800

Comparison of the first and second line on BESSEY high-performance clamps

	BESSEY high-performance clamps		classiX	
Order no.	SLM	SGM	GSL	GSM
Product range	+ + +	+ + +	+	+
Clamping width	200–600 mm	250–1500 mm	300–600 mm	250–600 mm
Throat depth	120 mm	140 mm	120 mm	140 mm
Optimised rail profile	✔	✔		
Clamping force up to	+ + + 8500 N	+ + + + + 12000 N	+ + 7500 N	+ + + + 11000 N
Special pressure plate with sintered steel insert	✔	✔		
Intellectual property rights	on rail, sliding arm, pressure plate and appearance			

Tensioning across the board

NO ALLOWANCES, NO AUXILIARY CONSTRUCTIONS

The original BESSEY U-clamps were also developed on the basis of the tried and tested all-steel, lever and high-performance clamps. Thanks to the characteristic, U-shaped bent fixed clamps, you can now clamp quickly and securely overlapping. Just like using a third hand – without any additional supports or auxiliary constructions!

U-shaped all-steel screw clamp GUZ

- Clamping force up to 4,000 N
- Double-sided step-over clamping, specially suited for T-profiles and double T-profiles
- Low weight
- Tempered stainless steel and fixed bracket for resilient and elastic clamping

Order number	Opening a	Throat depth b	Clamping depth c	Clamping depth d	Rail x	Weight
	mm	mm	mm	mm	mm	kg
GU25-12-6ZK	250	120	60	60	22x10.5	1.460

U-shaped high-performance clamp SGU

- Clamping force up to 12,000 N at tightening torque of 40 Nm
- Double-sided step-over clamping, specially suited for T-profiles and double T-profiles
- Long life due to heat-resistant pressure plate with sintered steel insert, which can be tilted up to 35°

Order number	Opening a	Throat depth b	Clamping depth c	Clamping depth d	Rail x	Weight
	mm	mm	mm	mm	mm	kg
SGU30-14-10	300	140	100	130	30x15	3.750

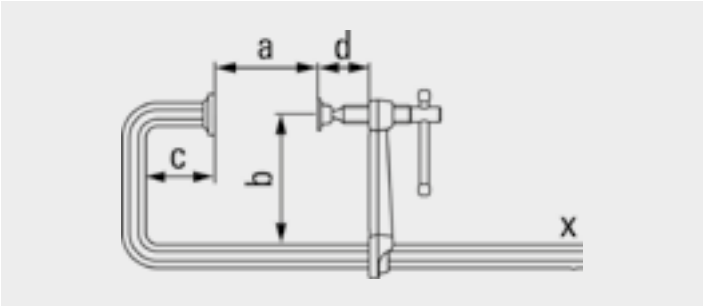

U-shaped high-performance clamp STBU

- Clamping force up to 22,000 N at tightening torque of 80 Nm
- Double-sided step-over clamping, specially suited for T-profiles and double T-profiles
- With 19 mm hexagonal bolt on the end of the spindle
- Long life due to heat-resistant pressure plate with sintered steel insert, which can be tilted up to 35°

Order number	Opening a	Throat depth b	Clamping depth c	Clamping depth d	Rail x	Weight
	mm	mm	mm	mm	mm	kg
STBU40-17-15	500	175	150	110	40x20	7.960

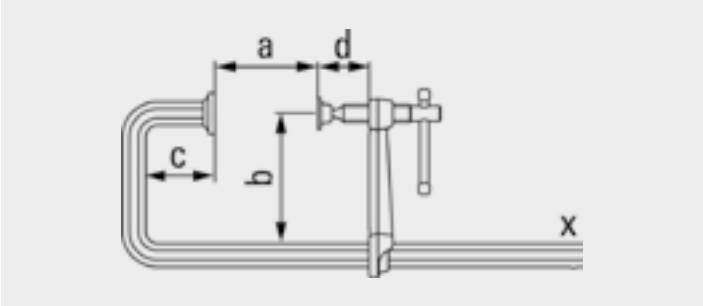

Special pressure plate

- Long service life thanks to heat-resistant special pressure plate with sintered steel insert

Various designs:
- Smooth faced, standard version (can be swivelled up to 35°)
- Rough faced for secure clamping on dirty surfaces (can be swivelled up to 35°)
- V-groove face for round, oval and edged workpieces (can be swivelled up to 35°)
- Rigid design with smooth surface

Order number	Version	Suitable for	Weight
			kg
3100736	standard	SLM, SGM, SGTM, STBM, STBVC, SGU, SLV, GSV, SPZ80K, TWM	0.226
3102127	rigid	SLM, SGM, SGTM, STBM, STBVC, SGU, SLV, GSV, SPZ80K, TWM	0,223
3100737	standard	STBS, STBU	0.264
3101192	serrated	SLM, SGM, SGTM, STBM, STBVC, SGU, SLV, GSV, SPZ80K, TWM	0.180
3101193	v-grooved	SLM, SGM, SGTM, STBM, STBVC, SGU, SLV, GSV, SPZ80K, TWM	0.269

U-shaped lever clamp GUH

- Clamping force up to 3,800 N
- Step-over clamping, specially suited for T profiles
- Low weight
- Quick – up to 5 x faster than regular clamps

Order number	Opening a	Throat depth b	Clamping depth c	Clamping depth d	Rail x	Weight
	mm	mm	mm	mm	mm	kg
GU25-12-6H	250	120	60	10	22x10.5	1.665

Clamping and spreading in the tightest of spaces

IDEALLY SUITED FOR PARTICULARLY DIFFICULT TASKS

With the original BESSEY Claw clamp you can clamp and spread in the tightest of spaces. Both in narrow openings and on short overhangs. This is made possible by the unique clamping and spreading mechanism, which is located behind the rail. The original BESSEY Claw clamp is also characterized by its robust design. This makes it ideal for particularly difficult tasks, such as welding and assembly work!

Claw clamp GRA

- Clamping and spreading force up to 7,500 N
- Externally-positioned spindle, protected from welding spatter
- Clear access to work area

Order number	Opening	Throat depth	Rail	Weight
	mm	mm	mm	kg
GRA30-12	300	120	28x11	2.410
GRA60-12	600	120	28x11	3.020
GRA100-12	1000	120	28x11	3.800

Pressure piece GRD

- Spreading from the inside outwards
- Flat jaw face
- V-groove for clamping round and oval workpieces

Order number	Suitable for	Weight
		kg
GRD	GRA	0.610

New flexibility for large spans

A MODULAR PRINCIPLE FOR A WIDE RANGE OF APPLICATION POSSIBILITIES

In addition to fully assembled high-performance clamp sets, BESSEY also offers accessories that can be combined in a variety of ways. These include two different rail models: the 27 x 13 mm profile in three different lengths and the 30 x 15 mm profile for work with high clamping forces and openings of up to three meters. All rails have end locks that can be released on both sides without tools. Sliding brackets that have already been fitted can be converted from clamping to spreading or replaced with other sliding brackets, but can also be supplemented with others. Sliding brackets are available with wooden, lever or toggle handles. By attaching a wide variety of sliding clamps, diverse and demanding clamping tasks can be solved quickly and easily. There are no limits to individuality.

Variable high-performance clamps – Complete set SLV

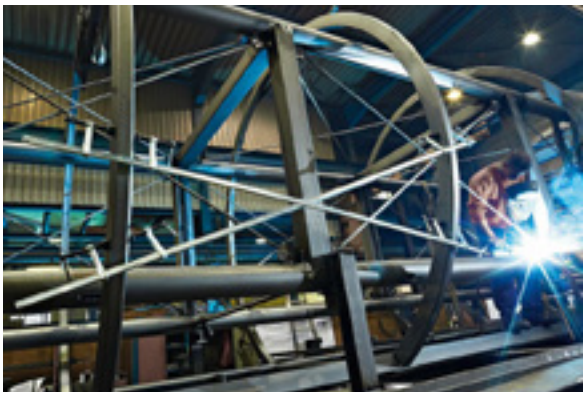

- Clamping force up to 6,500 N
- Tipping is prevented through central positioning on the workpiece
- Special heat-resistant pressure plate, can be tilted by up to 35°
- Clamp can be fed through an opening in the work-piece/component

Order number	Opening a	Throat depth b	Spreading width e	Rail x	Weight
	mm	mm	mm	mm	kg
SLV100M	1000	120	340–1250	27x13	4.710
SLV150M	1500	120	340–1750	27x13	5.900
SLV200M	2000	120	340–2250	27x13	6.500

Wide range of possible applications due to interchangeable sliding arm available in various different designs (see accessories)

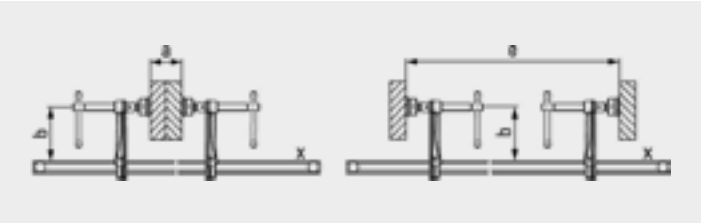

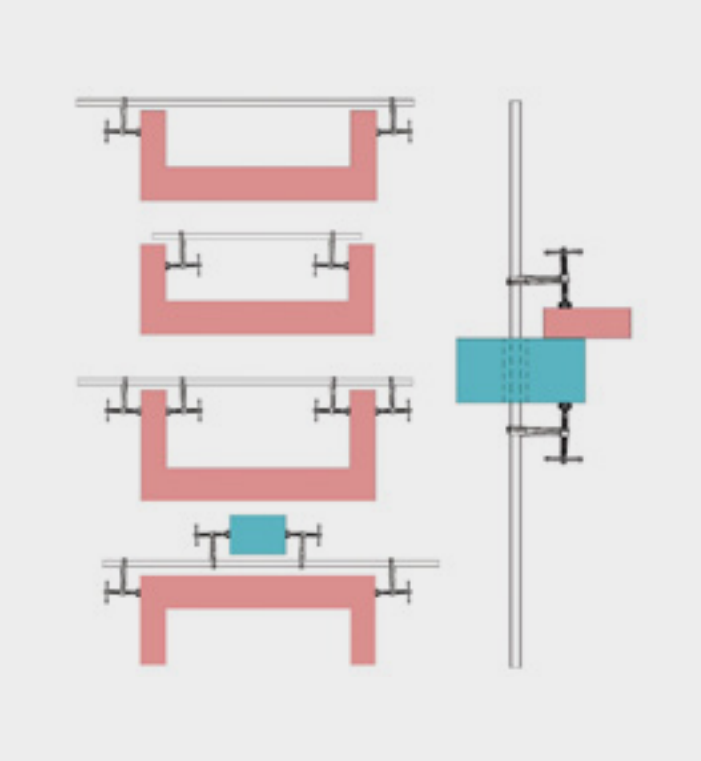

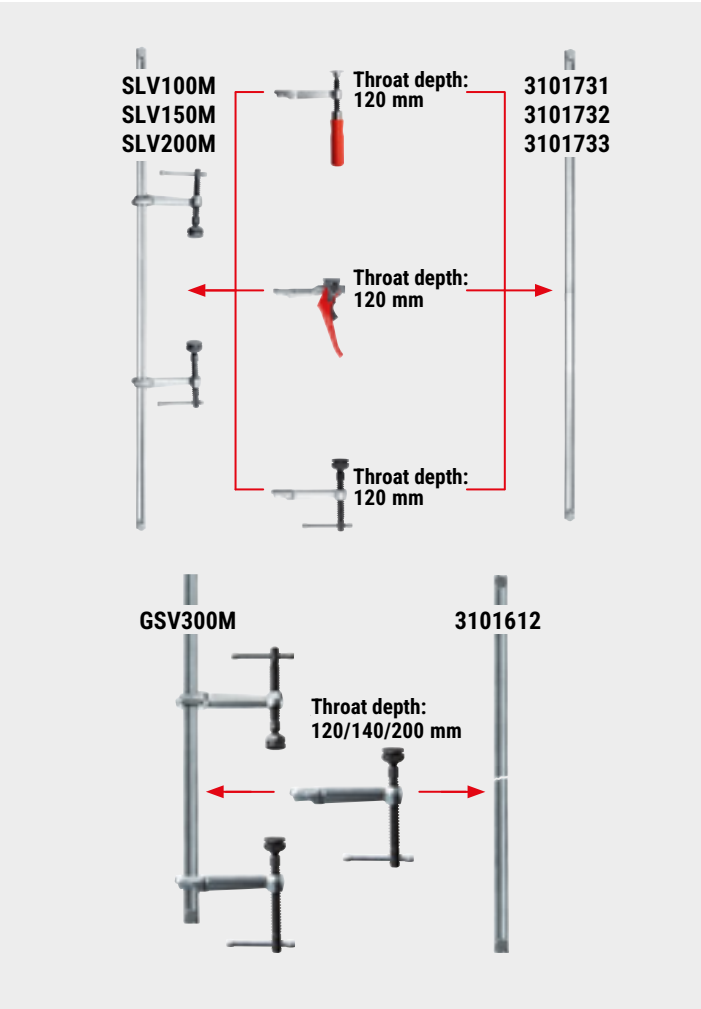

Variable high performance clamps – Complete set GSV

- Clamping force up to 9,000 N
- Tipping is prevented through central positioning on the workpiece
- Long service life thanks to special heat-resistant pressure plate with sintered steel insert, can be tilted by up to 35°
- Clamp can be fed through an opening in the work-piece/component

Order number	Opening a	Throat depth b	Spreading width e	Rail x	Weight
	mm	mm	mm	mm	kg
GSV300M	3000	140	400–3340	30x15	12.980

Wide range of possible applications due to interchangeable sliding arm available in various different designs (see accessories)

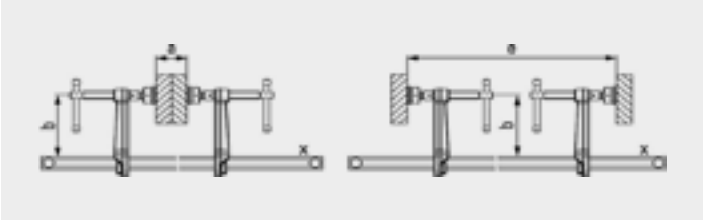

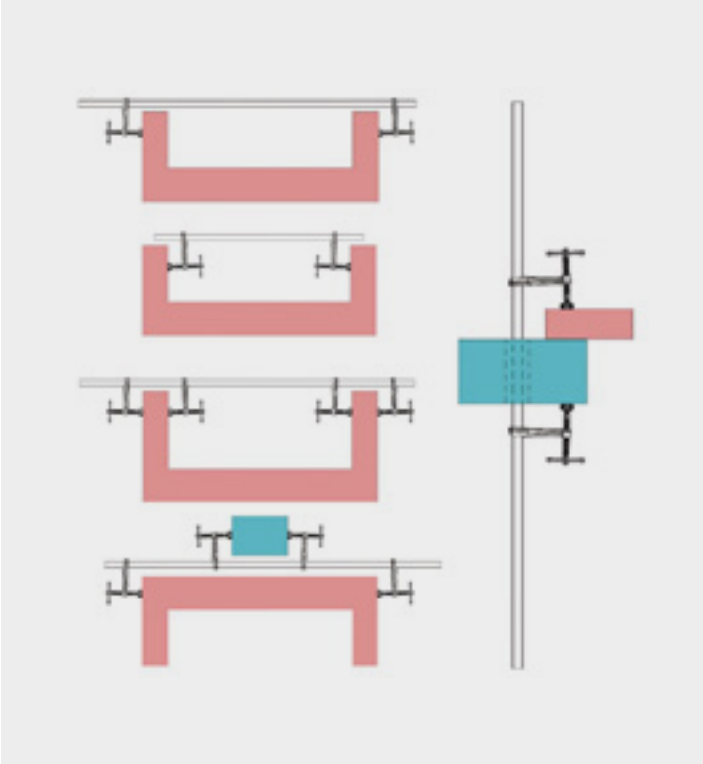

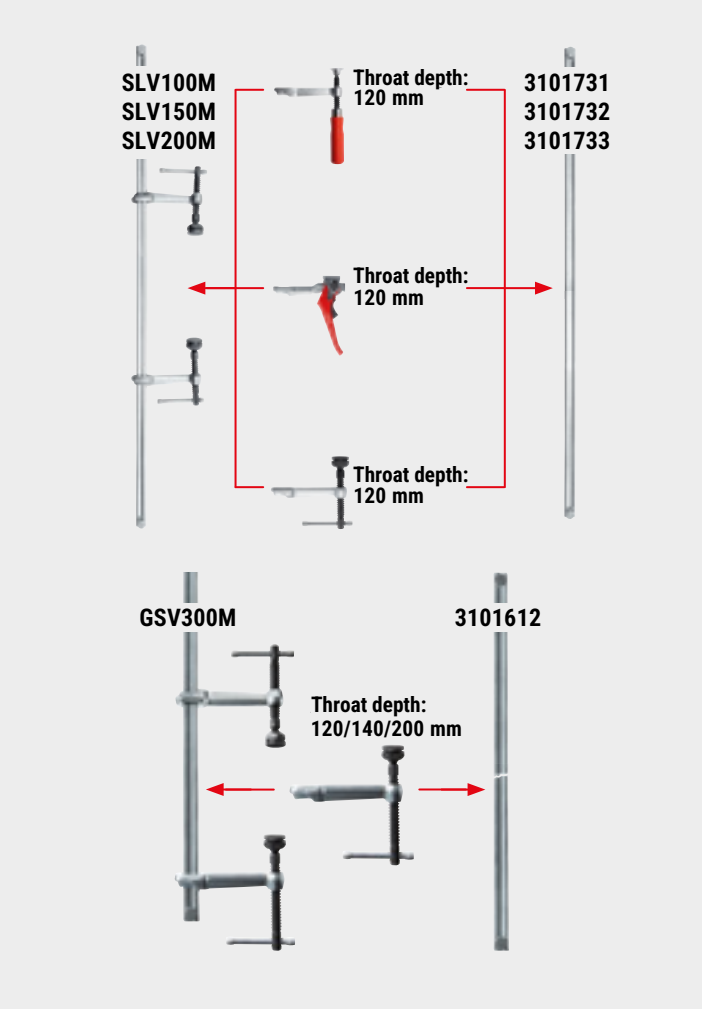

Special pressure plate

- Long service life thanks to heat-resistant special pressure plate with sintered steel insert

Various designs:
- Smooth faced, standard version (can be swivelled up to 35°)
- Rough faced for secure clamping on dirty surfaces (can be swivelled up to 35°)
- V-groove face for round, oval and edged workpieces (can be swivelled up to 35°)
- Rigid design with smooth surface

Order number	Version	Suitable for	Weight
			kg
3100736	standard	SLM, SGM, SGTM, STBM, STBVC, SGU, SLV, GSV, SPZ80K, TWM	0.226
3102127	rigid	SLM, SGM, SGTM, STBM, STBVC, SGU, SLV, GSV, SPZ80K, TWM	0,223
3100737	standard	STBS, STBU	0.264
3101192	serrated	SLM, SGM, SGTM, STBM, STBVC, SGU, SLV, GSV, SPZ80K, TWM	0.180
3101193	v-grooved	SLM, SGM, SGTM, STBM, STBVC, SGU, SLV, GSV, SPZ80K, TWM	0.269

SLV size rails

- 27 x 13 mm profile, cold drawn and galvanised
- End fastenings on both sides can be loosened without tools – for rapid changeover
- Suitable for all SLV size sliding arms

Order number	Opening a	Rail x	Weight
	mm	mm	kg
3101731	1000	27x13	2.850
3101732	1500	27x13	4.050
3101733	2000	27x13	5.250

GSV size rails

- 30 x 15 mm profile, cold drawn and galvanised
- End fastenings on both sides can be loosened without tools – for rapid changeover
- Suitable for all GSV size sliding arms

Order number	Opening a	Rail x	Weight
	mm	mm	kg
3101612	3000	30x15	10.400

Complete sliding arm for SLV sizes

- Three different grip variants/designs
- Suitable for all SLV size rails

Order number	Version	Throat depth b	Weight
		mm	kg
3101426	Wooden handle	120	0.730
3101337	Lever handle	120	1.100
3101338	Tommy bar including special pressure plate	120	0.820

Complete sliding arm for GSV sizes

- One arm design with three throat depths
- Suitable for GSV size rails

Order number	Version	Throat depth b	Weight
		mm	kg
3101329	Tommy bar including special pressure plate with sintered steel insert	120	1.130
3101330	Tommy bar including special pressure plate with sintered steel insert	140	1.225
3101331	Tommy bar including special pressure plate with sintered steel insert	200	1.400

Clamping with the original form of the screw clamp

IN DRAWN OR FORGED DESIGN

C-clamps are used when high clamping forces are required with the same clamping widths, primarily in metal and steel construction. The C-clamp is considered to be the original form of screw clamp. A wide variety of materials were and are used in their manufacture. For example, there were once models made of pure wood. Today, models with forged brackets and VC-clamps in proven BESSEY all-steel quality are available on the market. The special feature of the VC-clamp is that its handle is made from original BESSEY profile steel from the in-house drawing shop, tempered and electrogalvanized. This achieves a much higher tensile strength than cast versions.

C-clamp VC

- Clamping force of up to 15,000 N
- Nearly unbreakable and tempered
- Tried-and-true BESSEY all-steel quality

Order number	Opening	Opening	Throat depth	Throat depth	Rail	Clamping force	Weight
	mm	Inch	mm	Inch	mm	N	kg
VC2	50	2	50	2	19.5x9.5	7000	0.425
VC3	75	3	50	2	22x10.5	13000	0.630
VC4	100	4	60	2 3/8	25x12	13000	1.020
VC6	150	6	75	3	27x13	15000	1.405
VC8	200	7 7/8	90	3 1/2	30x15	15000	2.250
VC10	250	10	100	4	40x20	15000	4.010

C-clamp SC

- Clamping force up to 22,000 N
- Drop forged

Order number	Opening	Opening	Throat depth	Throat depth	Clamping force	Weight
	mm	Inch	mm	Inch	N	kg
SC40	40	1 5/8	40	1 5/8	5500	0.360
SC60	60	2 3/8	55	2 3/16	5500	0.565
SC80	80	3 1/8	65	2 9/16	10000	0.990
SC100	100	4	75	3	13500	1.400
SC120	120	7 7/8	85	3 1/4	18000	2.100
SC150	150	6	95	3 3/4	18000	2.350
SC200	200	7 7/8	105	4 1/4	22000	4.000

C-clamp CDF-C

- Clamping force up to 18,000 N
- Drop forged
- The copper-plated spindle prevents welding splatter from sticking

Order number	Opening	Opening	Throat depth	Throat depth	Clamping force	Weight
	mm	Inch	mm	Inch	N	kg
CDF403C	75	3	60	2 3/8	13000	0.850
CDF404C	105	4 1/4	85	2 3/4	16500	1.498
CDF406C	150	6	100	3 5/8	17000	2.320
CDF408C	205	8	125	4 1/2	17000	3.415
CDF410C	50-245	2-10	150	5 3/8	18000	5.300

Clamping with pliers

MANY VARIANTS FOR A WIDE RANGE OF APPLICATIONS

Whether for surrounding and overlapping clamping or for fixing adjacent workpieces: The original BESSEY Grip pliers are ideal in every case. This is because the infinitely adjustable jaws are parallel to each other or at the desired angle in any position. And best of all, the set clamping force remains constant in every opening position of the jaws.

Parallel grip GRZ

- Parallel jaw faces
- Prism recess for small round parts
- Includes pressure caps for gentle clamping of sensitive surfaces

Order number	Opening	Throat depth	Weight
	mm	mm	kg
GRZ10	100	65	1.000
GRZ20	200	65	1.200

C-grip GRZC

- For step-over clamping from both sides

Order number	Opening	Throat depth	Clamping depth	Weight
	mm	mm	mm	kg
GRZC	110	80	40	1.100

Pipe grip GRZRO

- Ideal for holding round objects of constant diameter
- Includes pressure caps
- Gentle clamping of sensitive surfaces
- Suitable for tack welding, heat-resistant up to 200° C

Order number	Throat depth	Suitable for	Weight
	mm		kg
GRZRO	65	Pipes Ø 0–110 mm	1.410

Safe earthing of welding equipment

FOR MORE SAFETY WHEN WELDING

BESSEY offers an extensive range of Earth (ground) clamps. They are available in classic F-shape with wooden handle, toggle handle or wing screw as well as C-shape with wing screw. All versions have sturdy malleable cast iron brackets with a connection hole, which can be used to safely earth the welding tool. To make cable routing even safer, one version also has a ring at the end of the rail through which the cable can be routed. This not only avoids tangled cables, but also prevents errors that can occur when working with a cable under tension. These clamps therefore set new standards in terms of safety.

Earth (ground) clamp LP / TP with tried-and true wooden handle

- With malleable cast iron arms
- Ergonomically shaped wood handle
- Grounding connection hole in the upper part

Order number	Opening	Throat depth	Rail	Hole Ø	Strength of current	Weight
	mm	mm	mm	mm	A	kg
LP-1	150	60	20x5	10.5	300	0.500
TP-1	150	80	25x6	10.5	400	0.759

Earth (ground) clamp LP / TP with thumb screw

- With malleable cast iron arms
- Practical thumb screw
- Grounding connection hole in the upper part
- TP-...F-RK: Cable strain relief at rail end / ring internal diameter 30 mm

Order number	Opening	Throat depth	Rail	Hole Ø	Strength of current	Weight
	mm	mm	mm	mm	A	kg
LP-1F	150	60	20x5	10.5	300	0.530
TP-1F	150	80	25x6	10.5	400	0.764
TP-2F	150	60	30x8	11	600	1.120
TP-1F-RK	150	80	25x6	10.5	400	0.780
TP-2F-RK	150	60	30x8	11	600	1.120

Earth (ground) clamp TP with tommy bar

- With malleable cast iron arms
- Tommy bar with rounded ends for simple transfer of force when clamping
- Grounding connection hole in the upper part

Order number	Opening	Throat depth	Rail	Hole Ø	Strength of current	Weight
	mm	mm	mm	mm	A	kg
TP-1K	150	80	25x6	10.5	400	0.750

Earth (ground) clamp CP

- With C-shaped malleable cast iron arms

Order number	Opening	Throat depth	Hole Ø	Strength of current	Weight
	mm	mm	mm	A	kg
CP-F	50	30	8.4	200	0.190

Clamping angles and miters

FREE ACCESS TO THE WORKPIECE DURING WELDING AND ASSEMBLY WORK

The original BESSEY Metal angle clamps have been specially developed for use in steel construction, welding and metalworking. Their versatile range of applications includes holding, fixing and aligning at exactly right angles – even workpieces of different thicknesses. The open working area also allows free access to the workpiece for welding and assembly work as well as for fixing T-joints. This is why no workshop should be without original BESSEY Metal angle clamps!

Welders' angle clamps WSM

- Automatic adjustment to workpieces of different thicknesses
- Sturdy jaws and base plate made from high-quality cast iron
- The copper-plated spindle prevents welding spatter from sticking
- Precise 90°-angles

Order number	Opening a	Jaw width	Jaw height	Current passage m	Weight
	mm	mm	mm	mm	kg
WSM9	2x90	110	35	60	3.580
WSM12	2x120	120	61	100	7.350

3D CAD data in the download area of the BESSEY website

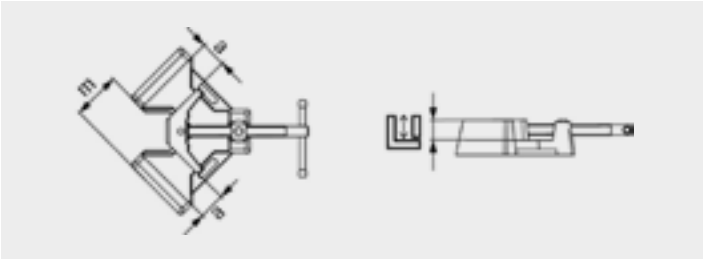

Welding clamp set SM 10

- Clamping aid for clamping components of different thicknesses at any chosen angle
- Sturdy body and base plate made from high-quality cast iron
- The copper-plated spindle prevents welding splatter from sticking
- Angle range: 5°–180°

Order number	Angle	Opening a	Jaw height	Weight
		mm	mm	kg
SM10-SET	5°–180°	100	35	10.660

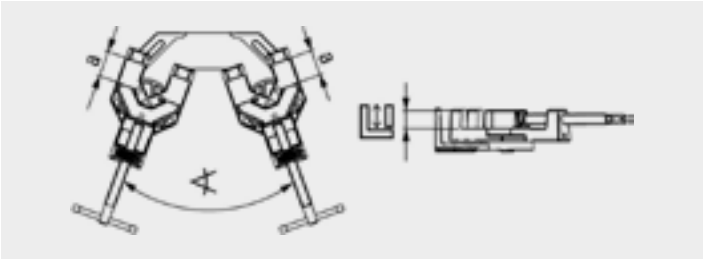

With the clamping tool specialist safe welding

EXPERIENCE BROUGHT TO THE TABLE!

BESSEY has applied the experience gained over many decades in the field of clamping tools to the development of its clamping elements for welding tables with 28 and 16 mm holes. BESSEY offers a comprehensive range of practical aids that can be used flexibly to make everyday work easier. With the standard clamping elements, you can choose from three handle variants with both variable and fixed throat depths. The range also includes a clamping element with a heat-resistant special pressure plate and a claw arm variant for free access to the work area. Special table clamping attachments are available for clamping oval, round and square workpieces. BESSEY Toggle clamps can also be used on welding tables thanks to adapters and extensions. Even angled and horizontal clamping is possible using a swivel adapter in conjunction with the extension. All elements can be integrated on the table without tools. This means they can be used variably and enable comfortable, safe and precise work.

Clamping element with variable throat depth TWV

- TWV16: Clamping force up to 2,500 N, TWV28: Clamping force up to 5,500 N
- Precise, individual clamping
- Tempered profile and sliding arm for sprung and elastic clamping
- Infinitely adjustable throat depth
- Various design versions:
- High quality 2-component plastic handle and tommy bar with rounded ends – each with smooth-running trapezoidal threaded spindle and tool-free pressure plate replacement
- Lever handle with an indexing mechanism for controlled, fast and vibration-proof clamping

Order number	Bolt Ø	Opening a	Throat depth b	Rail x	Weight
	mm	mm	mm	mm	kg
TWV16-20-15-2K	16	200	30–150	22x8.5	1.120
TWV16-20-15K	16	200	30–150	22x8.5	1.040
TWV16-20-15H	16	200	60–150	22x8.5	1.210
TWV28-30-17-2K	28	300	40–175	28x11	2.218
TWV28-30-17K	28	300	110–175	28x11	2.105
TWV28-30-17H	28	300	110–175	28x11	2.481

3D CAD data in the download area of the BESSEY website

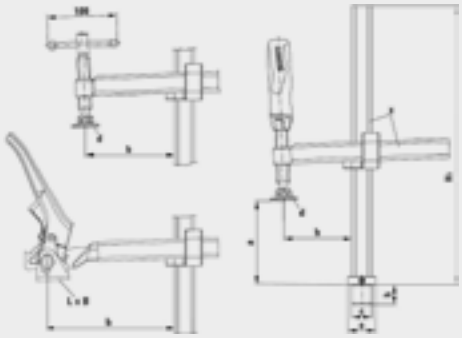

Table of dimensions TWV16 / TWV28

	Bolt Ø	Bolt height	Clamping height	Throat depth	Height of base	Pressure plate dimensions		Foot "F"		Rail profile
	c	h	a	b	H1	L x B	Ø d	Foot Ø e	Foot height	x
	mm	mm	mm	mm	mm	mm	mm	mm	mm	mm
TWV16-20-15-2K	16	20.5	200	30–150	265	–	32	30	10	22 x 8.5
TWV16-20-15K	16	20.5	200	30–150	265	–	32	30	10	22 x 8.5
TWV16-20-15H	16	20.5	200	60–150	265	41 x 26	–	30	10	22 x 8.5
TWV28-30-17-2K	28	28.5	300	40–175	400	–	38	40	12	28 x 11
TWV28-30-17K	28	28.5	300	40–175	400	–	38	40	12	28 x 11
TWV28-30-17H	28	28.5	300	110–175	400	47 x 31	–	40	12	28 x 11

Clamping element with fixed throat depth TW

- TW16 + TW22: Clamping force up to 3,000 N, TW28: Clamping force up to 5,000 N
- Precise, individual clamping
- Tempered profile and sliding arm for sprung and elastic clamping
- Various design versions:
- High quality 2-component plastic handle and tommy bar with rounded ends – each with smooth-running trapezoidal threaded spindle and tool-free pressure plate replacement
- Lever handle with an indexing mechanism for controlled, fast and vibration-proof clamping
- TW22: Compatible with Barth and Beck lift tables

Order number	Bolt Ø	Opening a	Throat depth b	Rail x	Weight
	mm	mm	mm	mm	kg
TW16-20-10-2K	16	200	100	22x8.5	0.930
TW16-20-10K	16	200	100	22x8.5	0.860
TW16-20-10H	16	200	100	22x8.5	1.010
TW22-20-10-2K	22	200	100	22x8.5	0.995
TW28-30-12-2K	28	300	120	28x11	1.680
TW28-30-14-2K	28	300	140	28x11	1.700
TW28-30-12K	28	300	120	28x11	1.620
TW28-30-14K	28	300	140	28x11	1.650
TW28-30-12H	28	300	120	28x11	2.065
TW28-30-14H	28	300	140	28x11	2.076

3D CAD data in the download area of the BESSEY website

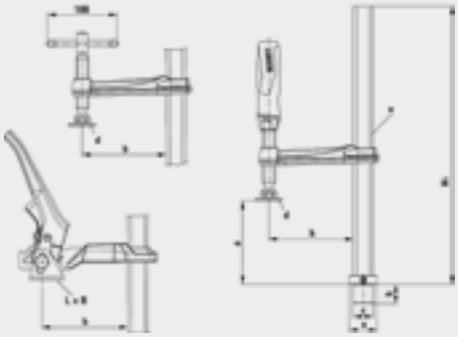

Table of dimensions TW16 / TW22 / TW28

	Bolt Ø	Bolt height	Clamping height	Throat depth	Height of base	Pressure plate dimensions		Foot F		Rail profile
	c	h	a	b	H1	L x B	Ø d	Foot Ø e	Foot height	x
	mm	mm	mm	mm	mm	mm	mm	mm	mm	mm
TW16-20-10-2K	16	20.5	200	100	265	–	32	30	10	22 x 8.5
TW16-20-10K	16	20.5	200	100	265	–	32	30	10	22 x 8.5
TW16-20-10H	16	20.5	200	100	265	41 x 26	–	30	10	22 x 8.5
TW22-20-10-2K	22	29	200	100	285	–	32	30	8	22 x 8.5
TW28-30-12-2K	28	28.5	300	120	400	–	38	40	12	28 x 11
TW28-30-14-2K	28	28.5	300	140	400	–	38	40	12	28 x 11
TW28-30-12K	28	28.5	300	120	400	–	38	40	12	28 x 11
TW28-30-14K	28	28.5	300	140	400	–	38	40	12	28 x 11
TW28-30-12H	28	28.5	300	120	400	47 x 31	–	40	12	28 x 11
TW28-30-14H	28	28.5	300	140	400	47 x 31	–	40	12	28 x 11

Clamping element with special pressure plate TWM28

- Clamping force up to 6,500 N
- Precise, individual clamping
- Tempered profile and sliding arm for sprung and elastic clamping
- Tempered spindle – particularly sturdy and wear-resistant – for noticeably improved service life
- Long life due to heat-resistant pressure plate with sintered steel insert, which can be tilted up to 35°

Order number	Bolt Ø	Opening a	Throat depth b	Rail x	Weight
	mm	mm	mm	mm	kg
TWM28-30-12	28	300	120	28x11	1.780

3D CAD data in the download area of the BESSEY website

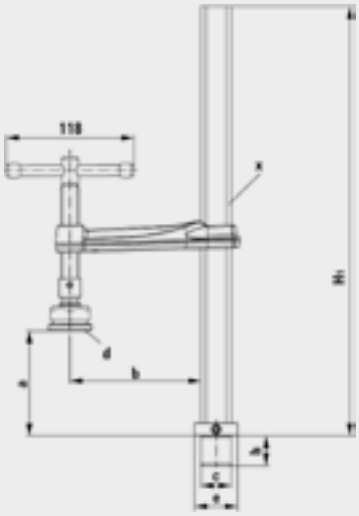

Table of dimensions TWM28-30-12

	Bolt Ø c	Bolt height h	Clamping height a	Throat depth b	Height of base H1	Pressure plate dimensions L x B	Pressure plate dimensions Ø d	Foot F Foot Ø e	Foot F Foot height	Rail profile x
	mm	mm	mm	mm	mm	mm	mm	mm	mm	mm
TWM28-30-12	28	28.5	300	120	400	–	40	40	12	28 x 11

Clamping element with gripping arm TW28GRS

- Clamping force up to 5,000 N
- The spindle is located on the outside for free access to the work area and to protect against welding spatter
- Special, sturdy V-grooved pressure plate, ideal even for clamping round or square workpieces
- Pivotable and infinitely adjustable in terms of height
- Particularly suited to clamping with the tightest of space constraints, in narrow openings as well as for short projections

Order number	Bolt Ø	Opening a	Throat depth b	Rail x	Weight
	mm	mm	mm	mm	kg
TW28GRS30-12	28	300	120	28x11	2.259

3D CAD data in the download area of the BESSEY website

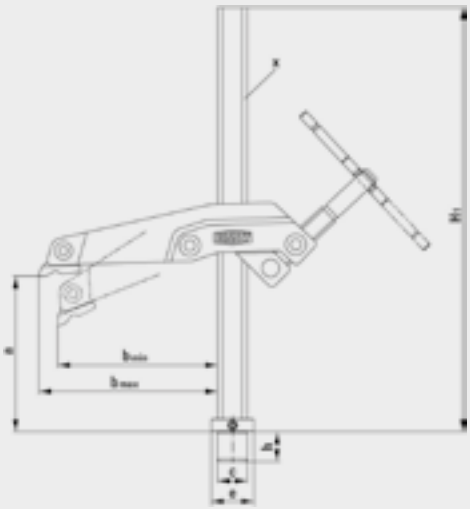

Table of dimensions TW28GRS30-12

	Bolt Ø c	Bolt height h	Clamping height a	Throat depth b	Height of base H1	Pressure plate dimensions L x B	Foot F		Rail profile x
							Foot Ø e	Foot height	
	mm	mm	mm	mm	mm	mm	mm	mm	mm
TW28GRS30-12	28	28.5	300	123–140	400	38 x 25	40	12	28 x 11

Vario table clamping attachment TWVAD (2 pcs./bag)

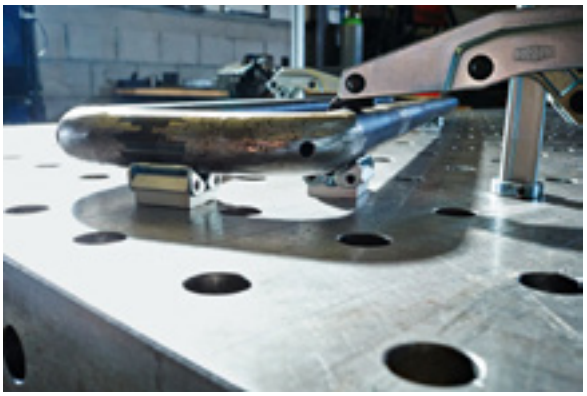

- Specifically adapted to round, oval and square workpieces
- Angle infinitely adjustable from 60° internal to 60° external
- Various design versions:
- TW16VAD/TW28VAD – version with bolt – for rapidly aligning and fixing the workpiece to the welding table
- TWVAD – version without bolt – for variable movement on the welding table

Order number	Bolt Ø	Angle	Jaw face width	Content	Weight
	mm		mm	Pc	kg
TW16VAD	16	from 60° inner to 60° outer	45	2	0.380
TW28VAD	28	from 60° inner to 60° outer	45	2	0.570
TWVAD	–	from 60° inner to 60° outer	45	2	0.280

3D CAD data in the download area of the BESSEY website

Toggle clamp adapter TWA-STC

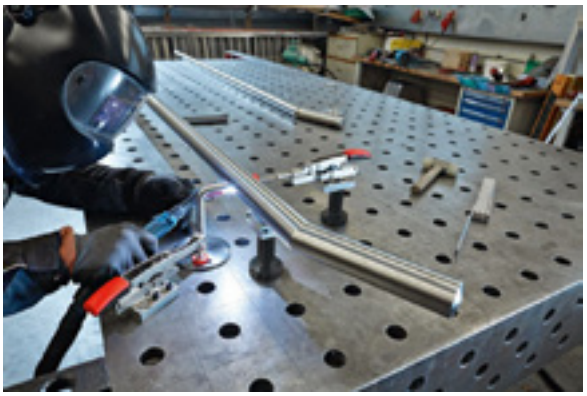

- Accessory for BESSEY STC toggle clamp with horizontal base plate
- With bolt – for use directly on the welding table
- Without bolt – for screwing to the extension TWX

Order number	Bolt Ø	Suitable for	Fixing screw hole diameter	Weight
	mm		mm	kg
TW16A-STC	16	STC-VH / STC-HH / STC-IHH	M5	0.190
TW28A-STC	28	STC-VH / STC-HH /STC-IHH	M6	0.280

3D CAD data in the download area of the BESSEY website

Extension TWX

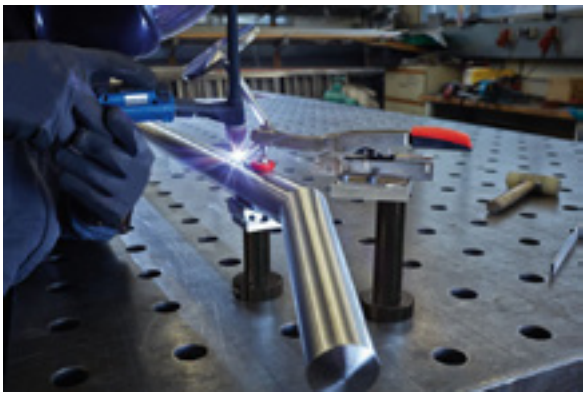

- Accessory for BESSEY toggle clamp adapter TWA-STC, TWVAD and TW28AV
- Lowering of round workpieces is infinitely adjustable using the adjusting ring in the table

Order number	Bolt Ø	Suitable for	Adjusting range	Weight
	mm		mm	kg
TW16X	16	TW16A-STC / TW16VAD / TWVAD	15–200	0.410
TW28X	28	–	15–300	1.760

3D CAD data in the download area of the BESSEY website

Tilting adapter TW28AV

- Clamping force up to 3,000 N
- Accessory for BESSEY extension TW28X
- Pivoting spindles with stepless adjustment from -52° to +52°
- Lockable trapezoidal nut for secure fastening of the workpiece
- High quality, 2-component plastic grip with long spindle

Order number	Bolt Ø	Opening a	Suitable for	Weight
	mm	mm		kg
TW28AV	28	160	TW28X	0.900

3D CAD data in the download area of the BESSEY website

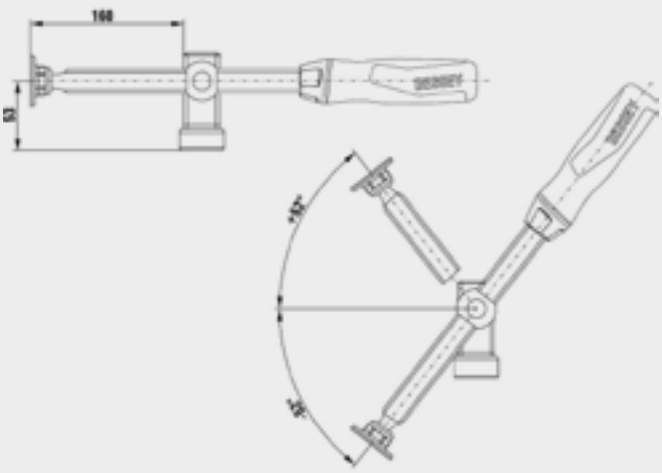

Clamping on fixtures and machine tables

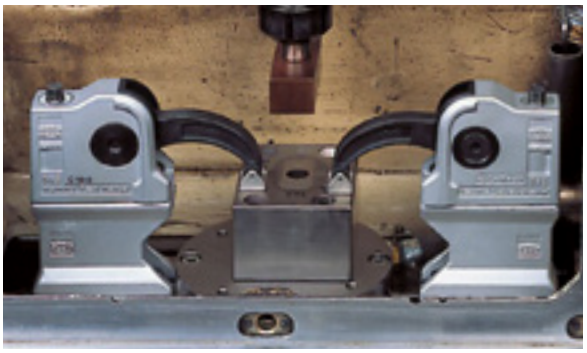

FAST, POWERFUL AND SAFE CLAMPING ON FIXTURES AND MACHINE TABLES

At BESSEY you will also find a selection of practical machine table clamps – ideal clamping tools for use in assembly, drilling, reaming, milling, grinding, honing, eroding, testing and much more. The original BESSEY BAS clamps are characterized above all by their extremely compact design and high clamping force. This is because the housing and pressure arms are made of tempered stainless steel and are therefore extremely resilient – with a long service life and a small footprint. The BS machine table clamp and the GRS Claw machine clamp can be swiveled and are infinitely adjustable in height. The BS is characterized by a lever mechanism that allows quick clamping and releasing. If free access to the work area is required or clamping is to be carried out in the tightest of spaces, the GRS Claw machine clamp makes this possible thanks to its external spindle. Thanks to its movable pressure plate, the BSG machine table clamp also offers a solution for clamping inclined parts up to 35 degrees.

BAS-C compact clamp, fixing hole open

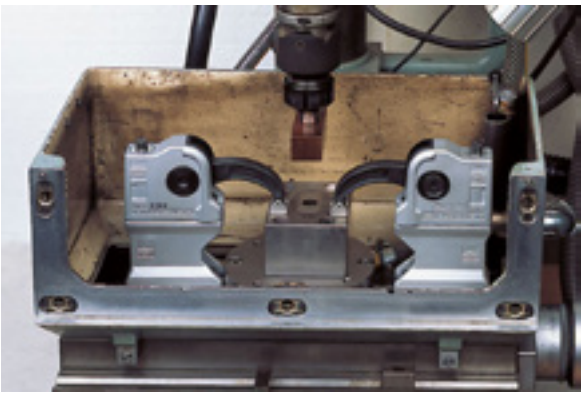

- Clamping force up to 16,000 N
- Space-saving construction, thus up to 30 % smaller than comparable competitive models
- Housing and pressure arm made from hardened and tempered stainless steel, making it extremely robust and durable
- Available in three pressure arm versions: Short and long pressure arm with swivelable aluminium pressure shoe or pointed pressure arm for clamping on narrow sections or in confined spaces
- BAS-C with open fixing hole and BAS-CB with closed fixing hole for M 10 / M 12

Order number	Opening a	Throat depth b	Weight
	mm	mm	kg
BAS-C9-4	88	40	1.300
BAS-C10-6	97	60	1.300
BSP-C10-6	97	60	1.300

3D CAD data in the download area of the BESSEY website

BAS-CB compact clamp, fixing hole closed

- Clamping force up to 16,000 N
- Space-saving construction, thus up to 30 % smaller than comparable competitive models
- Housing and pressure arm made from hardened and tempered stainless steel, making it extremely robust and durable
- Available in three pressure arm versions: Short and long pressure arm with swivelable aluminium pressure shoe or pointed pressure arm for clamping on narrow sections or in confined spaces
- BAS-C with open fixing hole and BAS-CB with closed fixing hole for M 10 / M 12

Order number	Opening a	Throat depth b	Weight
	mm	mm	kg
BAS-CB9-4	88	40	1.300
BAS-CB10-6	97	60	1.300
BSP-CB10-6	97	60	1.300

3D CAD data in the download area of the BESSEY website

Table of dimensions BAS-C / BAS-CB / page 84

Base unit BASO

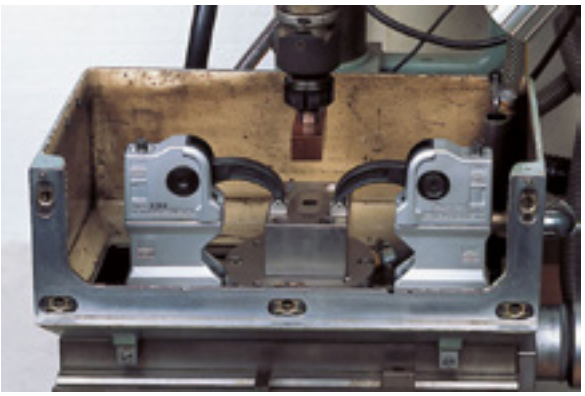

- 80 mm extension
- Stackable
- Fastening hole open, including cheese head screw
- Suitable for all BESSEY BAS clamps

Order number	Fastening thread	For socket head screw DIN912	Opening a	Weight
			mm	kg
BASO	M10	M10 / M12	80	0.450

3D CAD data in the download area of the BESSEY website

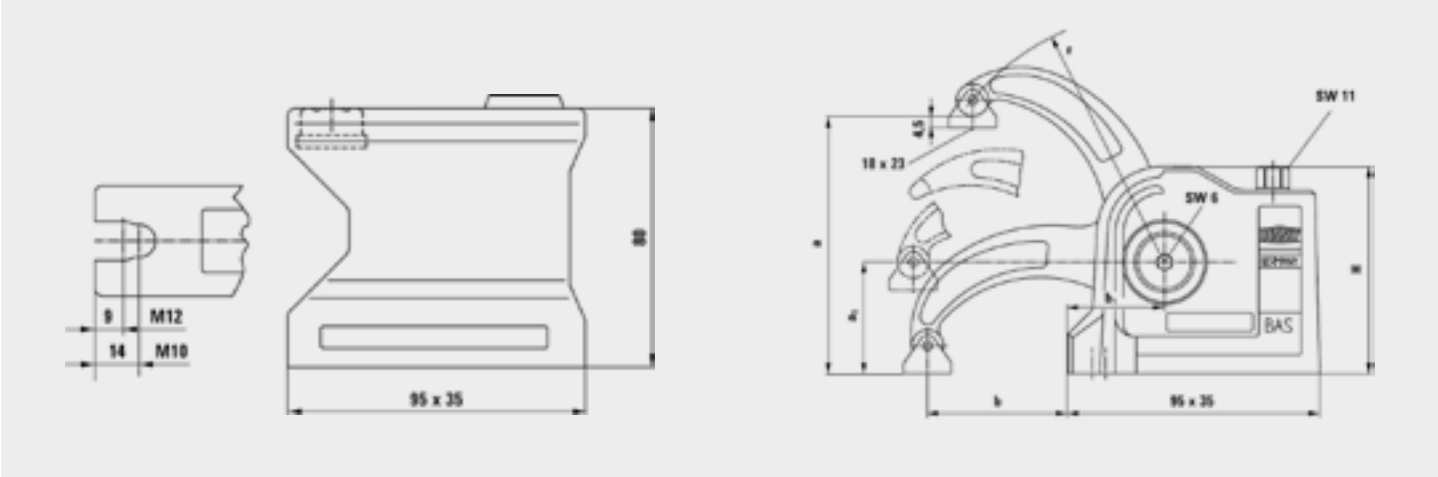

Table of dimensionsBase unit BASO

	Clamping height a	Opening opt. a1	Throat depth b	Distance b1	Clamping arm r	Housing height H	Socket head screws	Fastening hole	Clamping force max.
	mm	mm	mm	mm	mm	mm	DIN 912		N
BAS-C9-4	88	42	40	36.5	75	78	M10 / M12	open	16000
BAS-C10-6	97	42	60	36.5	94	78	M10 / M12		12000
BSP-C10-6	97	42	60	36.5	94	78	M10 / M12		12000
BAS-CB9-4	88	42	40	36.5	75	78	M10 / M12	closed	16000
BAS-CB10-6	97	42	60	36.5	94	78	M10 / M12		12000
BSP-CB10-6	97	42	60	36.5	94	78	M10 / M12		12000
BASO	80	–	–	–	–	80	M10 / M12	open	–

Hold down table clamps BS

- Clamping force up to 10,000 N
- Tilting and infinitely height-adjustable
- For drilling and light milling work
- Lever mechanism for rapid clamping and release

Order number	Opening a	Throat depth b	Rail x	Fixing screw hole diameter	Weight
	mm	mm	mm	mm	kg
BS2N	200	100	19.5x9.5	10.5	1.350
BS3N	200	120	22x10.5	13	1.550
BS4N	200	120	28x11	16.5	2.489
BS5N	240	140	30x15	16.5	3.300
BS6N	500	140	30x15	16.5	4.000

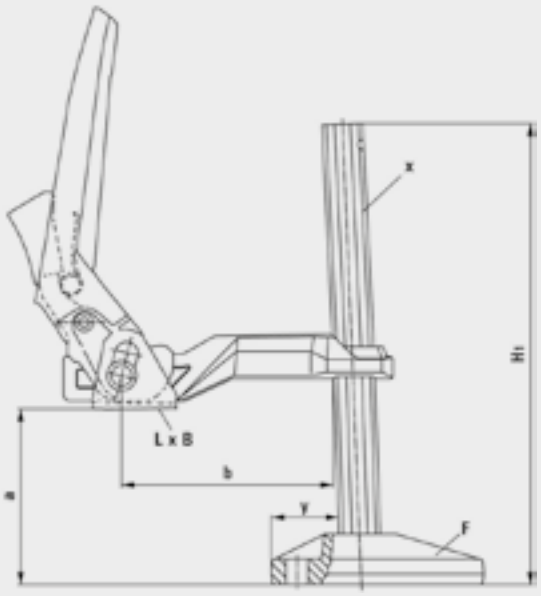

Table of dimensionsBase unit BASO

	Clamping height a	Throat depth b	Height of base H1	Pressure plate dimensions L x B	Foot F				Rail profile x	Fastening hole Ø	Achievable clamping force at a clamping height of 50 mm
					Foot length	Foot width	Foot height	Distance to the rail y			
	mm	mm	mm	mm	mm	mm	mm	mm	mm	mm	N
BS2N	200	100	260	42 x 25	100	38	25	32	19.5 x 9.5	10.5	3500
BS3N	200	120	260	42 x 25	100	38	25	32	22 x 10.5	13	5500
BS4N	200	120	270	48 x 31	135	49	33	42	28 x 11	16.5	7500
BS5N	240	140	320	48 x 31	135	49	33	42	30 x 15	16.5	10000
BS6N	500	140	580	48 x 31	135	49	33	42	27 x 13	16.5	10000
GRS20-12	200	123–140	265	25 x 35	135	48	33	42	28 x 11	16.5	7500
BSG21-14	210	140	322	Ø 40	135	48	33	42	30 x 15	16.5	12000

Claw machine clamp GRS

- Clamping force up to 7,500 N
- Swivelling, vertically infinitely adjustable clamp
- Externally-positioned spindle to allow unobstructed access to the work area and clamping in confined spaces
- For drilling and light milling work

Order number	Opening a	Throat depth b	Rail x	Fixing screw hole diameter	Weight
	mm	mm	mm	mm	kg
GRS20-12	200	123–140	28x11	16.5	2.810

3D CAD data in the download area of the BESSEY website

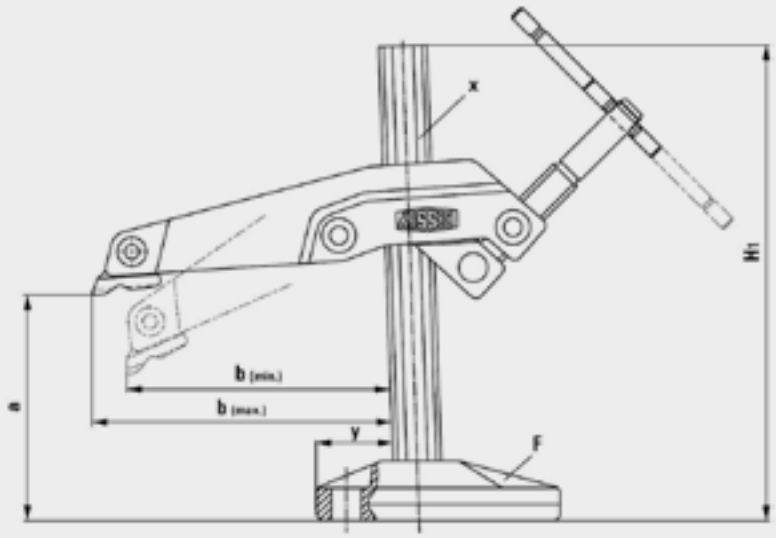

Table of dimensionsBase unit BASO

	Clamping height a	Throat depth b	Height of base H1	Pressure plate dimensions L x B	Foot F				Rail profile x	Fastening hole Ø	Achievable clamping force at a clamping height of 50 mm
					Foot length	Foot width	Foot height	Distance to the rail y			
	mm	mm	mm	mm	mm	mm	mm	mm	mm	mm	N
BS2N	200	100	260	42 x 25	100	38	25	32	19.5 x 9.5	10.5	3500
BS3N	200	120	260	42 x 25	100	38	25	32	22 x 10.5	13	5500
BS4N	200	120	270	48 x 31	135	49	33	42	28 x 11	16.5	7500
BS5N	240	140	320	48 x 31	135	49	33	42	30 x 15	16.5	10000
BS6N	500	140	580	48 x 31	135	49	33	42	27 x 13	16.5	10000
GRS20-12	200	123–140	265	25 x 35	135	48	33	42	28 x 11	16.5	7500
BSG21-14	210	140	322	Ø 40	135	48	33	42	30 x 15	16.5	12000

Hold down table clamps BSG

- Clamping force up to 12,000 N
- For fastening to tables and other equipment
- Long life due to heat-resistant pressure plate with sintered steel insert, which can be tilted up to 35°

Order number	Opening a	Throat depth b	Rail x	Fixing screw hole diameter	Weight
	mm	mm	mm	mm	kg
BSG21-14	210	140	30x15	16.5	3.220

3D CAD data in the download area of the BESSEY website

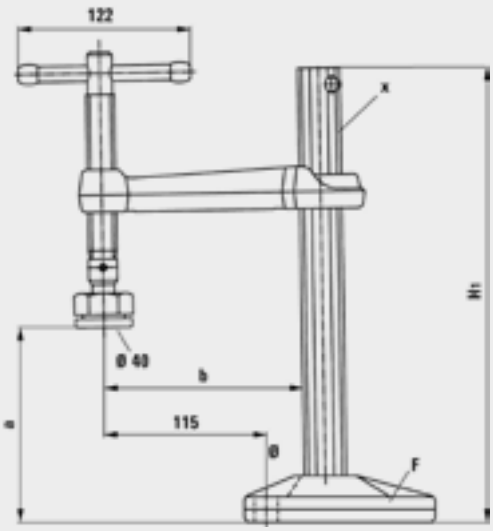

Table of dimensionsBase unit BASO

	Clamping height a	Throat depth b	Height of base H1	Pressure plate dimensions L x B	Foot F				Rail profile x	Fastening hole Ø	Achievable clamping force at a clamping height of 50 mm
					Foot length	Foot width	Foot height	Distance to the rail y			
	mm	mm	mm	mm	mm	mm	mm	mm	mm	mm	N
BS2N	200	100	260	42 x 25	100	38	25	32	19.5 x 9.5	10.5	3500
BS3N	200	120	260	42 x 25	100	38	25	32	22 x 10.5	13	5500
BS4N	200	120	270	48 x 31	135	49	33	42	28 x 11	16.5	7500
BS5N	240	140	320	48 x 31	135	49	33	42	30 x 15	16.5	10000
BS6N	500	140	580	48 x 31	135	49	33	42	27 x 13	16.5	10000
GRS20-12	200	123–140	265	25 x 35	135	48	33	42	28 x 11	16.5	7500
BSG21-14	210	140	322	Ø 40	135	48	33	42	30 x 15	16.5	12000

Quick fixation with self-adjusting span width

TENSION MORE FLEXIBLY UP TO 5 X FASTER

With the patented Self-adjusting toggle clamps from BESSEY, workpieces of different heights can be fixed quickly and securely for machining. This makes them perfect for use in small batch production, for example. But it wouldn't be BESSEY Self-adjusting toggle clamps if our development team hadn't come up with something special again – true to the company motto „BESSEY. Simply better." The outstanding feature of BESSEY Self-adjusting toggle clamps is the automatic adjustment to different workpiece heights and widths with virtually constant clamping force. Time-consuming manual adjustment of the pressure screw is therefore a thing of the past. But when it comes to flexibility, BESSEY Self-adjusting toggle clamps have even more to offer. The clamping force can be perfectly adapted to the requirements of the workpiece by simply turning an adjusting screw in the joint. And the hole pattern of the base plate has been designed so flexibly that nothing is left to be desired when it comes to quick and secure fastening.

Highly flexible and up to 5 x faster

READY TO GO – THE FIRST TIME AND FOR QUICK SET-UP DURING WORKPIECE CHANGES

BESSEY STC toggle clamps adapt to workpieces of varying thickness – without manual setting of the spindle and, with practically the same clamping force:

- due to an automatic clamping width range

UNCOMPROMISINGLY VERSATILE

One size of the BESSEY toggle clamp replaces multiple competitor sizes simultaneously:

- due to an extremely large clamping range, thanks to the patented mechanism

POWERFUL AND GENTLE

Even sensitive workpieces, e.g. with veneered or varnished surfaces, can be gently clamped:

- due to moving pressure plate with removable protective cap
- due to clamping force regulation via adjustment screw in the joint

Vertical toggle clamp with open arm and horizontal base plate STC-VH

- Lever is in vertical clamping position
- Automatic, seamless adjustment of the clamping height up to 35 mm with almost constant clamping force – without manual changing of the pressing screw position
- Adjustable clamping force up to 2,500 N, based on the adjusting screw in the joint
- Sturdy, tempered sheet steel for longer service life
- Base plate hole pattern suitable for millimetres and inches
- High-quality, oil-resistant two-component plastic handle

Order number	Opening a	Automatic adjustment	Clamping force	Weight
	mm	mm	N	kg
STC-VH20	35	20	1100	0.218
STC-VH50	40	35	2500	0.430

3D CAD data at „http://bessey.partcommunity.com", „https://www.traceparts.com" and in the download area of the BESSEY website

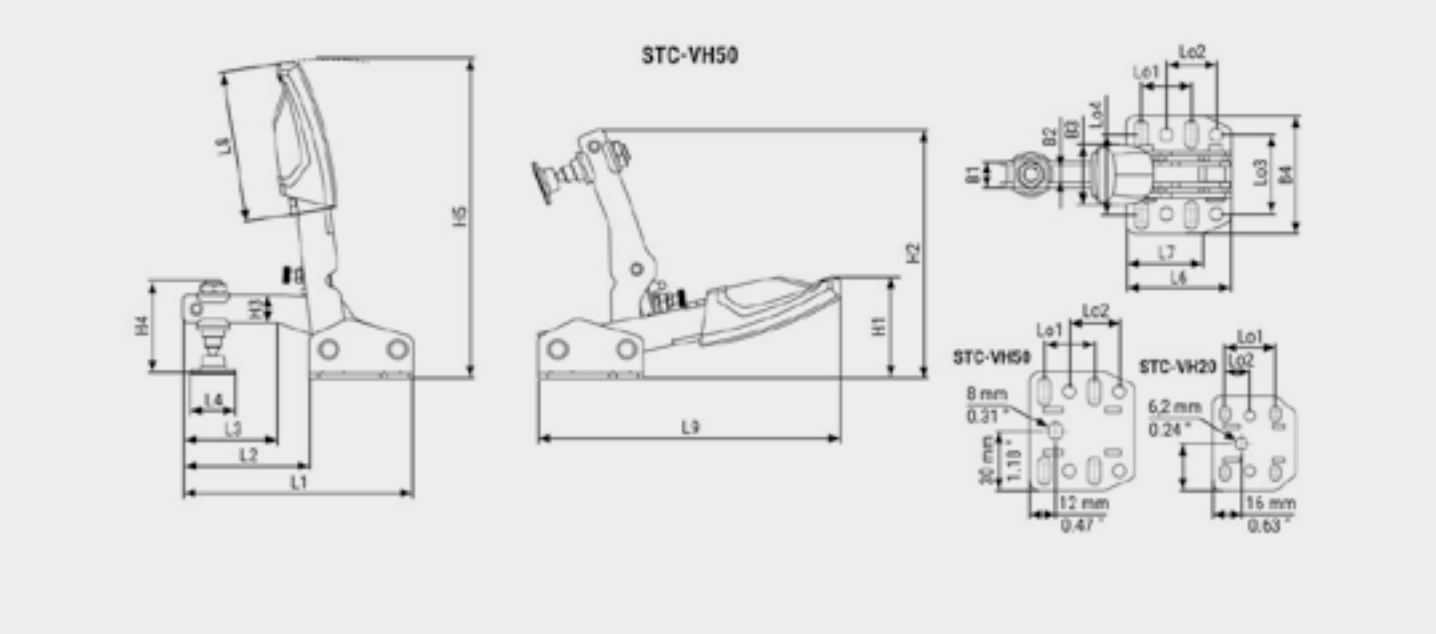

Table of dimensions

		L1	L2	L3	L4	L5	L6	L7	L8	L9	H1	H2	H3	H4	H5	H6	B1	B2	B3	B4	Lo1	Lo2	Lo3	Lo4	Ø
STC-VH20	mm	92	50	20	18.7	–	43	35	60	123	41	100	10	42	129	–	10	6	24	48	26	13	28	27 – 32	5.5
	"	3.62	1.97	0.79	0.74	–	1.69	1.38	2.36	4.84	1.61	3.94	0.39	1.65	5.08	–	0.39	0.24	0.94	1.89	1.02	0.51	1.10	1.06 – 1.25	0.22
STC-VH50	mm	116	63	40	24.6	–	53	44	76	154	52	126	14	50	162	–	13.25	8.25	30	60	25.4	25.4	40	33 – 48	6.5
	"	4.57	2.48	1.57	0.97	–	2.09	1.73	2.99	6.06	2.05	4.96	0.55	1.97	6.38	–	0.52	0.32	1.18	2.36	1.00	1.00	1.57	1.30 – 1.89	0.26

Horizontal toggle clamp with open arm and horizontal base plate STC-HH

- In the clamped position, the lever is horizontal
- Automatic and infinitely variable adjustment of the clamping height up to 35 mm while clamping force remains unchanged – without having to make manual changes to the position of the pressure screws
- Clamping force is variable up to 2,500 N depending on the adjustment of the set screw in the cantilevered joint
- Sturdy, tempered metal sheets for a long service life
- Hole pattern on the base plate designed to facilitate fast and secure clamping set-up for metric and imperial
- High-quality oil resistant two-component plastic handle

Order number	Opening a	Automatic adjustment	Clamping force	Weight
	mm	mm	N	kg
STC-HH20	35	20	1100	0.200
STC-HH20SB	35	20	1100	0.200
STC-HH50	40	35	2500	0.380
STC-HH50SB	40	35	2500	0.380
STC-HH70	60	35	2500	0.420
STC-HH70SB	60	35	2500	0.420

3D CAD data at „http://bessey.partcommunity.com", „https://www.traceparts.com" and in the download area of the BESSEY website

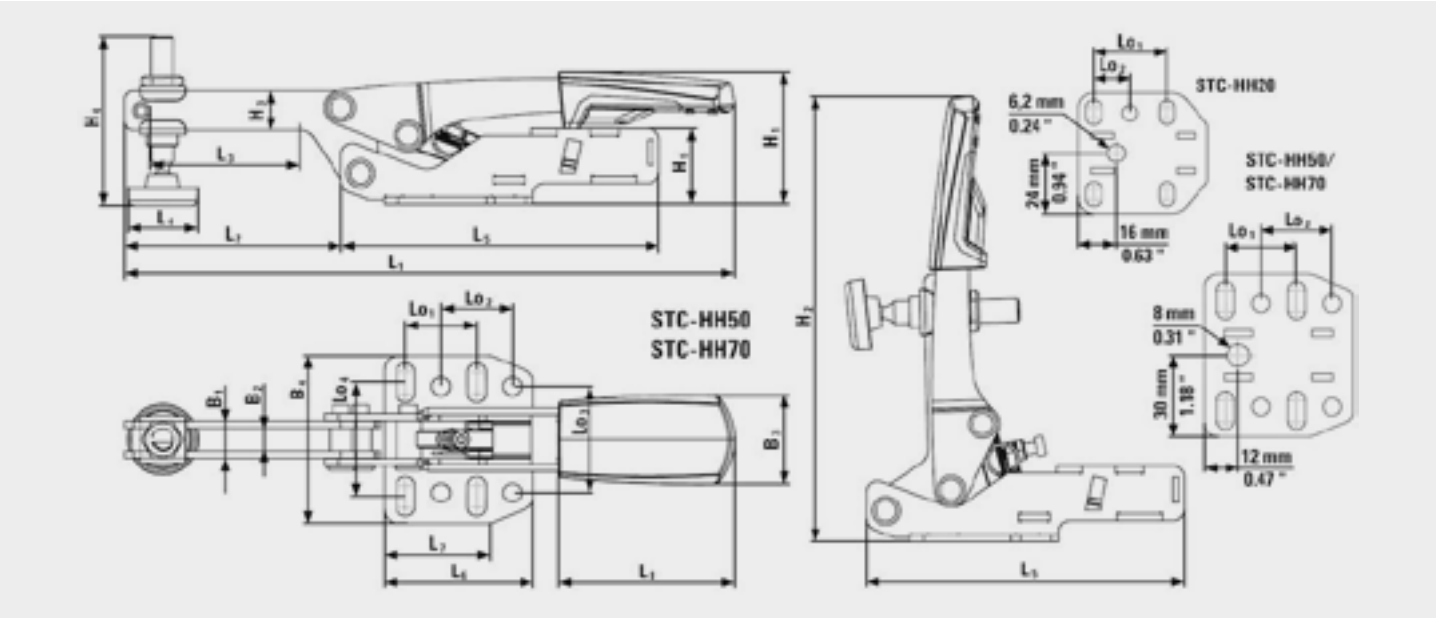

Table of dimensions

		L1	L2	L3	L4	L5	L6	L7	L8	L9	H1	H2	H3	H4	H5	H6	B1	B2	B3	B4	Lo1	Lo2	Lo3	Lo4	Ø
STC-HH20	mm	169	58	39	18.7	91	43	32	50	–	38	125	11	42	22	–	10	6	26	48	25.7	12.7	28	27 – 32	5.5
	"	6.65	2.28	1.54	0.74	3.58	1.69	1.26	1.97	–	1.50	4.92	0.43	1.65	0.87	–	0.39	0.24	1.02	1.89	1.01	0.50	1.10	1.06 – 1.25	0.22
STC-HH50	mm	217	77	40	24.6	113	53	38	72	–	47	158	14	50	27	–	13	8	32	60	25.4	25.4	38	33 – 48	6.5
	"	8.54	3.03	1.57	0.97	4.45	2.09	1.50	2.83	–	1.85	6.22	0.55	1.97	1.06	–	0.51	0.31	1.26	2.36	1.00	1.00	1.50	1.30 – 1.89	0.26
STC-HH70	mm	217	77	40	24.6	113	53	38	72	–	64	175	14	68	44	–	13	8	32	60	25.4	25.4	38	33 – 48	6.5
	"	8.54	3.03	1.57	0.97	4.45	2.09	1.50	2.83	–	2.52	6.89	0.55	2.68	1.73	–	0.51	0.31	1.26	2.36	1.00	1.00	1.50	1.30 – 1.89	0.26

Push/pull clamp with horizontal base plate STC-IHH

- Moving the handle moves the push-pull rod
- Automatic and infinitely variable adjustment of the clamping height up to 13 mm while clamping force remains unchanged – without having to make manual changes to the position of the pressure screws
- Adjustable clamping force up to 2,500 N, based on the adjusting screw in the joint
- Sturdy, tempered metal sheets for a long service life
- Base plate hole pattern suitable for millimetres and inches
- High-quality oil resistant two-component plastic handle

Order number	Opening a	Automatic adjustment	Clamping force	Weight
	mm	mm	N	kg
STC-IHH15	25	8	1100	0.190
STC-IHH25	35	13	2500	0.450
STC-IHH25SB	35	13	2500	0.460

3D CAD data at „http://bessey.partcommunity.com", „https://www.traceparts.com" and in the download area of the BESSEY website

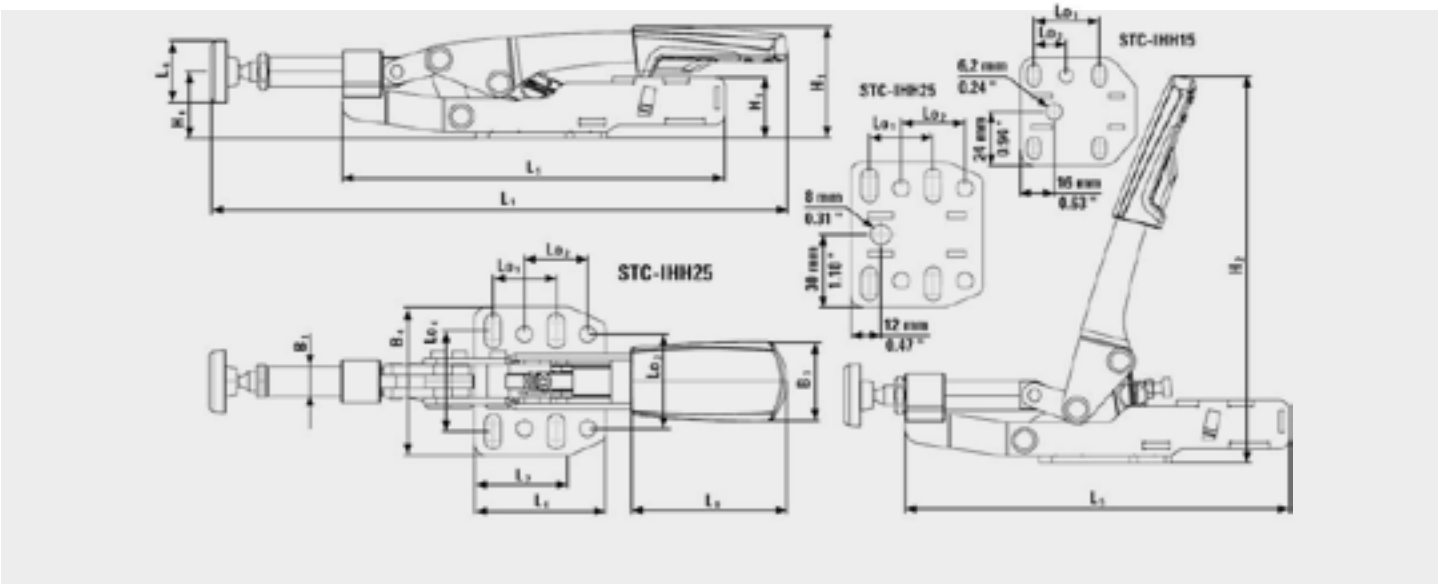

Table of dimensions

		L1	L2	L3	L4	L5	L6	L7	L8	L9	H1	H2	H3	H4	H5	H6	B1	B2	B3	B4	Lo1	Lo2	Lo3	Lo4	Ø
STC-IHH15	mm	178	–	–	18.7	122	43	32	50	–	36	122	–	–	20	21.6	8.5	–	26	48	25.7	12.7	28	27 – 32	5.5
	"	7.01	–	–	0.74	4.80	1.69	1.26	1.97	–	1.42	4.80	–	–	0.79	0.85	0.33	–	1.02	1.89	1.01	0.50	1.10	1.06 – 1.25	0.22
STC-IHH25	mm	233	–	–	24.6	154	53	38	73	–	46	155	–	–	25	27	12	–	32	60	25.4	25.4	38	33 – 48	6.5
	"	9.17	–	–	0.97	6.06	2.09	1.50	2.87	–	1.81	6.10	–	–	0.98	1.06	0.47	–	1.26	2.36	1.00	1.00	1.50	1.30 – 1.89	0.26

Adapter for multifunction tables STC-SET-T20

- For using the BESSEY toggle clamps on multi-function tables such as Festool MFT and Sortimo WorkMo with hole diameter of 20 mm and plate thickness of min. 19 mm to max. 25 mm

Order number	Suitable for	Content	Weight
			kg
STC-SET-T20	STC-HH50 / STC-HH70 / STC-IHH25 / STC-VH50	1 x Cylindrical screw DIN 912 M8 x 35 / 1 x Lock pin D20 x 17 / 1 x Knurled nut M8	0.090

STC accessory set for multifunction tables

- For using on multifunction tables such as Festool MFT and Sortimo WorkMo with hole diameter of 20 mm and plate thickness of min. 19 mm to max. 25 mm

Order number	Opening	Automatic adjustment	Clamping force	Content	Weight
	mm	mm	N		kg
STC-HH50-T20	40	35	2500	1 x STC-HH50 + 1 x STC-SET-T20	0.470
STC-HH70-T20	60	35	2500	1 x STC-HH70 + 1 x STC-SET-T20	0.510
STC-IHH25-T20	35	13	2500	1 x STC-IHH25 + 1 x STC-SET-T20	0.540
STC-VH50-T20	40	35	2500	1 x STC-VH50 + 1 x STC-SET-T20	0.520

Toggle clamp systainer STC-S-MFT

- Multi-functional systainer for installation technicians
- With wood insert including 20 holes
- And 3 different clamping options

Order number	Content	Weight
		kg
STC-S-MFT	4 x Horizontal toggle clamp STC-HH50 / 2 x Push-pull toggle clamp STC-IHH25 / 6 x Adapter STC-SET-T20 / 2 x All-steel table clamp GTR12	5.710

Toggle clamp adapter TWA-STC

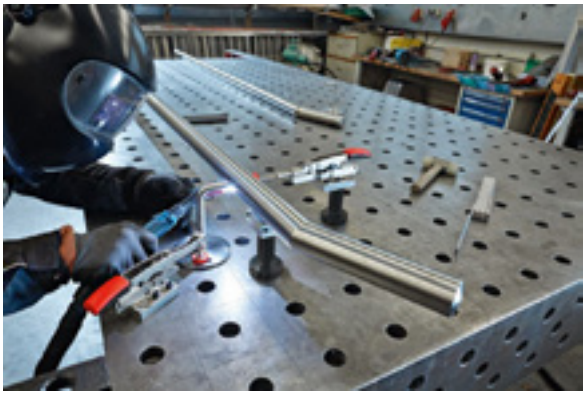

- Accessory for BESSEY STC toggle clamp with horizontal base plate
- With bolt – for use directly on the welding table
- Without bolt – for screwing to the extension TWX

Order number	Bolt Ø	Suitable for	Fixing screw hole diameter	Weight
	mm		mm	kg
TW16A-STC	16	STC-VH / STC-HH / STC-IHH	M5	0.190
TW28A-STC	28	STC-VH / STC-HH / STC-IHH	M6	0.280

3D CAD data in the download area of the BESSEY website

Extension TWX

- Accessory for BESSEY toggle clamp adapter TWA-STC, TWVAD and TW28AV
- Lowering of round workpieces is infinitely adjustable using the adjusting ring in the table

Order number	Bolt Ø	Suitable for	Adjusting range	Weight
	mm		mm	kg
TW16X	16	TW16A-STC / TW16VAD / TWVAD	15–200	0.410
TW28X	28	–	15–300	1.760

3D CAD data in the download area of the BESSEY website

Lifting, lowering or aligning with up to 180 kg

IMPRESSIVELY POWERFUL, ERGONOMIC AND SAFE

The BEYCEPS is an innovative assembly tool with an impressive lifting force of up to 180 kg. Whether in the professional trade or DIY sector - it is perfect for lifting, lowering and aligning workpieces with just one hand. Thanks to tool-free conversion, the BEY23 can also be used for clamping work. Its ergonomic and intuitive operation allows you to work safely and with millimeter precision. The enclosed housing provides additional safety and the protective caps supplied protect sensitive surfaces. A real all-rounder for precise and reliable assembly work. The two-part BEY-IK accessory set, consisting of an extension adapter and rail unit, significantly extends the range of use of the BEY23. With a load capacity of up to 60 kg, the BEYCEPS accessory combination is ideal for mounting wall cabinets, sideboards or bathroom furniture.

180 kg – the new BEYCEPS can do it

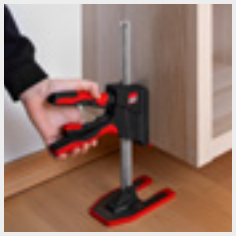

POWERFUL AND VERSATILE

The BEYCEPS enables assembly work with a lifting force of up to 180 kg. There are many possible applications in both the professional and DIY sectors:

- due to the large usable range when lifting or spreading from 5 to 230 mm (without mounted protective cap on the stand)
- for work with a working range of 170 to 390 mm thanks to the quick, tool-free conversion for clamping
- by combining it with the BEY-IK installation kit available as an accessory

CONVENIENT AND SAFE HANDLING

With the BEYCEPS, workpieces can be raised, lowered and aligned gently and with millimeter precision using just one hand. Operation is ergonomic, intuitive and safe:

- thanks to the pump lever made of 2-component plastic placed on the top
- due to the separate levers for fine lowering and releasing arranged under the pump lever. This prevents accidental release

PROTECTED AND GENTLE WORKING

When developing the one-handed lifting clamp BEYCEPS, great importance was also attached to protecting the product, user and workpiece. This is evident:

- thanks to the closed plastic housing. This protects the internal mechanics from dust, dirt and chips and prevents fingers from becoming trapped
- thanks to the protective caps for the stand and lifting plate included in the scope of delivery. They are easy to attach and prevent damage to workpieces with sensitive surfaces

NEW One-handed lifting tool BEYCEPS BEY23

- Lifting force up to 1,800 N / 180 kg / 400 lbs
- For lifting (up to 8 mm per operation of the pump lever), lowering (up to 4 mm per operation of the lowering lever) and aligning workpieces with millimeter precision, gently and safely with just one hand
- Ergonomic and safe handling, as the pump lever made of 2-component plastic is positioned on the top and the two levers for fine lowering and releasing are arranged separately below it
- Closed plastic housing protects the mechanism from dust, dirt and chips and prevents fingers from getting trapped
- Can be converted without tools for clamping tasks
- Protective caps for stand and lifting plate – included in the scope of delivery – prevent damage to sensitive surfaces
- CE labelling

Item number	Lifting force	Utilisation area Lifting / Spreading	Utilisation area Clamping	Rail	Content	Weight
		mm	mm	mm		kg
BEY23	Up to 180 kg (1,800 N)	5–230	170–390	22x8	1 x One-handed lifting tool / 1 x Protective cap for stand / 1 x Protective cap for lifting plate	1.943

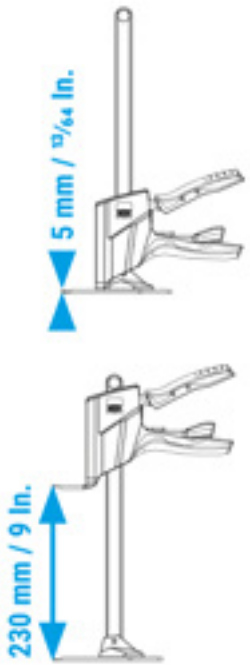

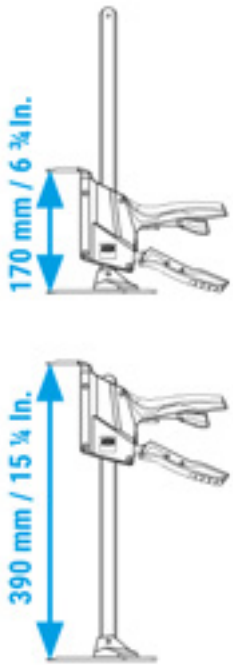

NEW Installation kit BEYCEPS BEY-IK

- Two-piece accessory set consisting of extension adapter and rail unit for one-handed lifting tool BEYCEPS BEY23
- Load capacity of up to 60 kg for quick and precise assembly, e.g. wall cabinets, floating sideboards and bathroom furniture
- Quick, tool-free installation – only in conjunction with the extension adapter (usable range 170 mm to 400 mm) or additionally with rail unit (usable range 392 mm to 620 mm)
- Safe and gentle thanks to non-slip and scratch-resistant protective caps

Item number	Lifting force	Utilisation area Extension adapter	Utilisation area Extension adapter + Rail unit	Rail	Content	Weight
		mm	mm	mm		kg
BEY-IK	Up to 60 kg (600 N)	170–400	392–620	22x8	1 x Extension adapter / 1 x Rail unit	1.234

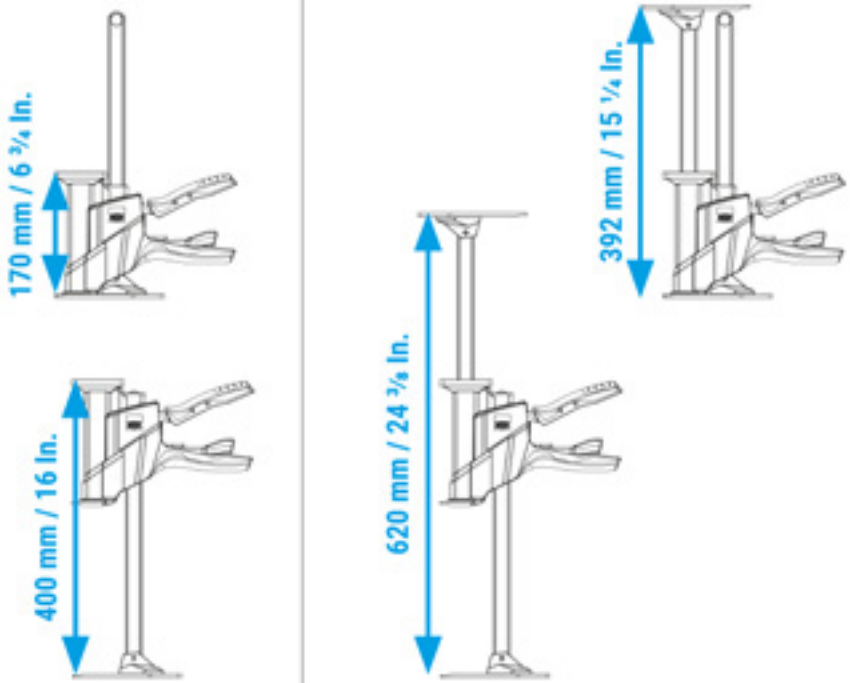

Large-area tensioning

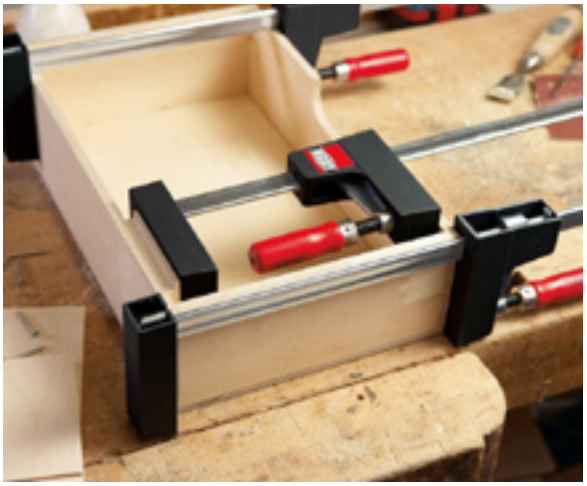

IDEAL FOR DELICATE WORKPIECES AND RIGHT ANGLES

The large, precisely parallel clamping surfaces are typical of the original BESSEY K body REVO parallel clamp and the Lightweight parallel clamp UK UniKlamp. They can be used to clamp and spread delicate surfaces and right angles without any problems. Round and pointed workpieces too. And the best thing is: thanks to the extra large support surfaces, both the original BESSEY K body REVO parallel clamp and the Lightweight parallel clamp UK UniKlamp can be used universally – even behind and to the side of the high-quality hollow profile rail. This even makes clamping points accessible that you cannot reach with conventional screw clamps.

The evolution of the REVO – greater power and safety in a new design

PRECISE AND GENTLE
Workpieces with sensitive surfaces can be clamped and spread exactly parallel to each other – even behind and on the side of the rail. Corners and recessed edges as well as pointed and round surfaces can also be perfectly aligned:

- due to extremely large clamping surfaces that are attached perpendicular to the rail
- due to three removable pressure caps that are repellent to glue, and also resistant to paint and grease solvents
- due to workpiece supports that prevent the workpiece from coming into contact with the rail

POWERFUL AND SAFE
They securely clamp with a clamping force of up to 8,000 N:

- due to the metal-reinforced plastic housing
- due to the optimised sliding arm with double slide protection: It holds the clamp reliably with the set clamping force and prevents any unintentional slipping of the sliding arm in the unclamped condition

VERSATILE AND WELL THOUGHT OUT
The clamps provide an enormous number of possible applications:

- due to ingenious accessories, such as tilting adapter, frame press set, clamp extension and table clamp
- the ergonomically formed 2-component symmetrical plastic handle with hexagon socket means the clamping force can be comfortably applied (max. torque 17 Nm)
- the continuously adjustable head for the KREV Vario version enables the clamp to be positioned in the middle of the workpiece for optimum weight distribution

Vario K Body REVO parallel clamp KREV

- Clamping force up to 8,000 N
- Very large parallel clamping surfaces with 3 removable pressure caps
- Metal-reinforced plastic housing and optimised sliding arm with double slide protection for more power and safety: The set clamping force is maintained and the sliding arm cannot unintentionally slip in the unclamped condition
- Can be converted without tools for spreading tasks
- High-quality 2-component symmetrical plastic handle with hexagon socket for the comfortable application of the clamping force (max. torque 17 Nm)
- KREV with continuously adjustable and fixable upper section for optimum positioning on the workpiece

Order number	Opening a	Throat depth b	Spreading width e	Rail x	Weight
	mm	mm	mm	mm	kg
KREV100-2K	1000	95	260–1130	29x9	3.770
KREV150-2K	1500	95	260–1610	29x9	4.250
KREV200-2K	2000	95	260–2080	29x9	5.300
KREV250-2K	2500	95	260–2580	29x9	6.300

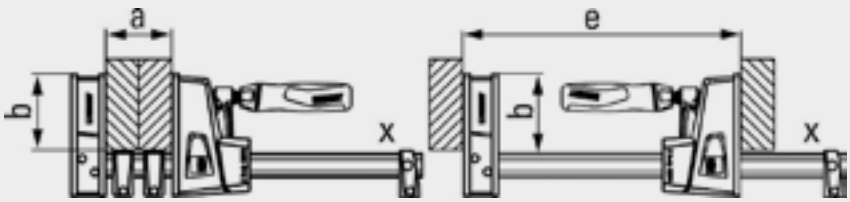

K Body REVO parallel clamp KRE

- Clamping force up to 8,000 N
- Very large parallel clamping surfaces with 3 removable pressure caps
- Metal-reinforced plastic housing and optimised sliding arm with double slide protection for more power and safety: The set clamping force is maintained and the sliding arm cannot unintentionally slip in the unclamped condition
- Can be converted without tools for spreading tasks
- High-quality 2-component symmetrical plastic handle with hexagon socket for the comfortable application of the clamping force (max. torque 17 Nm)
- KREV with continuously adjustable and fixable upper section for optimum positioning on the workpiece

Order number	Opening a	Throat depth b	Spreading width e	Rail x	Weight
	mm	mm	mm	mm	kg
KRE30-2K	300	95	255–390	29x9	2.150
KRE60-2K	600	95	255–730	29x9	2.761
KRE80-2K	800	95	255–930	29x9	3.101
KRE100-2K	1000	95	255–1130	29x9	3.450
KRE125-2K	1250	95	255–1355	29x9	3.870
KRE150-2K	1500	95	255–1610	29x9	4.280
KRE200-2K	2000	95	255–2080	29x9	5.090
KRE250-2K	2500	95	255–2580	29x9	6.050

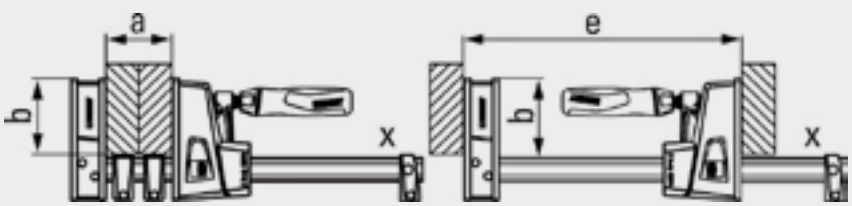

NEW Body clamp set KRE-SET-A

- Set includes four body clamps from the KRE series and extensive accessories: KRE100-2K, 2 x KR-AS, 1 x KP, 1 x KBX20 and 4 x TK6

Item number	Content	Weight
		kg
KRE-SET-A	4 x KRE100-2K / 2 x KR-AS / 1 x KP / 1 x KBX20 / 4 x TK6	15.850

Variable jaw KRE-VO

- Steplessly adjustable and fixable upper section for improved workpiece positioning
- Very large parallel clamping surfaces
- With 2 pressure caps to protect delicate surfaces
- Can be converted to spreading function with no need for tools

Order number	Suitable for	Weight
		kg
KRE-VO	KRE / KREV / KR / KRV	0.590

Framing set KP

- KP Framing System (from 30 cm to 250 cm/12"–98") with four 90° KP Blocks
- Separately adjustable clamping force with 2 inserted clamps per corner
- Lightweight / easy to assemble

Order number	Suitable for	Content	Weight
			kg
KP	KRE / KREV / KR / KRV	4 Rail couplings / 4 Adapters	0.550

Tilting K Body clamp adapter KR-AS

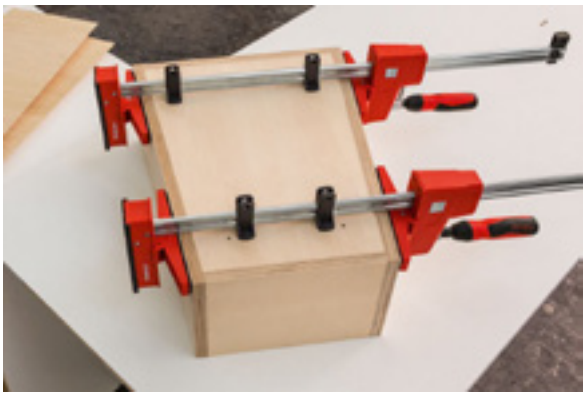

- Adapter with tilting clamping jaws with a tilt range of -15° to +15°
- Clamping on sloping and parallel surfaces

Order number	Suitable for	Jaw width	Jaw height	Content	Weight
		mm	mm	Pc	kg
KR-AS	KRE / KREV / KR / KRV	170	25	2	0.175

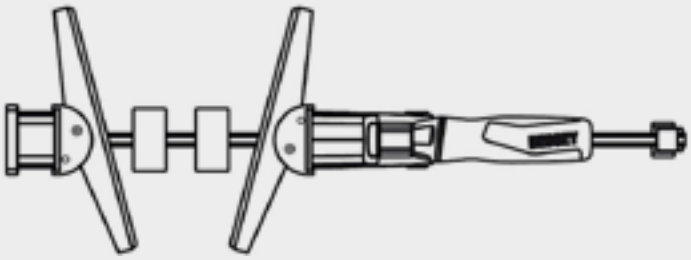

K Body parallel clamp extender KBX

- Connect any two K Body parallel clamps to increase the clamping capacity. The connector is made of robust aluminum.

Order number	Suitable for	Weight
		kg
KBX20	KRE / KREV	0.750

Table clamp

- Especially for DIY applications and domestic appliances
- Special accessory for angle clamps WS 3/WS 6, screw clamp S 10 and K Body REVO parallel clamps KRE/KREV and KR/KRV to hold them to a work surface edge

Order number	Bolt Ø	Opening	Throat depth	Weight
	mm	mm	mm	kg
TK6	8	60	22	0.100
RB269	8	60	28	0.190
LM10/5R8	8	100	50	0.216
LM15/5R8	8	150	50	0.250

Lightweight parallel clamp UK UniKlamp

- Clamping force up to 1,500 N
- Parallel jaw faces with extra-large contact surfaces
- Clamping of various shapes, along the whole length of the rail
- Universally applicable
- Light and easy-to-handle
- No need for tools for switching between clamping and spreading

Order number	Opening a	Throat depth b	Spreading width e	Rail x	Weight
	mm	mm	mm	mm	kg
UK16	160	80	172–270	20x5	0.620
UK30	300	80	172–415	20x5	0.720
UK60	600	80	172–720	20x5	0.930
UK80	800	80	172–920	20x5	1.050
UK100	1000	80	172–1120	20x5	1.250

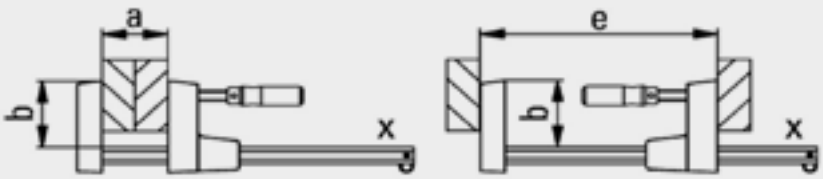

Area pressure clamps FK

- Clamping force up to 5,000 N
- 2 large, tilting jaw faces
- For workpieces with a sloping contact surface
- Large-area clamping of all workpieces from both sides

Order number	Opening	Throat depth	Rail	Weight
	mm	mm	mm	kg
FK16-8	160	80	16x7.5	0.600
FK20-10	200	100	19.5x9.5	1.100
FK40-10	400	100	19.5x9.5	1.400

Box clamp KS

- Clamping force up to 5,000 N
- Infinitely adjustable clamping jaws
- Clamp on angled and parallel surfaces

Order number	Opening	Throat depth	Weight
	mm	mm	kg
KS100	200–1000	16	3.230
KS150	200–1500	16	3.940

Extension KSV

- Accessory for BESSEY box clamp KS

Order number	Opening	Weight
	mm	kg
KSV	1000	1.524

Tension comfortably – even in the tightest of spaces

THE CLAMP WITH THE SPECIAL TWIST

Compared to classic screw clamps, lever clamps or one-handed clamps, the unique GearKlamp GK is much more compact, as its handle is positioned around the rail. Each turn of the handle transmits the clamping force to the spindle via a patent-pending mechanism concealed in the sliding arm. This innovative design has decisive advantages for the user. On the one hand, there are no interfering tool components in confined working areas when using the GearKlamp GK, and on the other hand, ergonomic handling is guaranteed in every clamping situation.

The clamp with an extra twist

UNIQUE COMPACT DESIGN
The GearKlamp is extremely flexible and can even be used in the tightest of spatial conditions:

- due to the patented mechanism that separates the handle from the spindle and positions it around the rail
- due to the crossed v-grooves on the upper section for securely holding round, pointed and angular components

ERGONOMIC USE
The clamp contains all kinds of clamping technology and guarantees the user greater comfort:

- due to the high-quality two-component plastic handle for safe handling
- due to the quick-release shift button for quickly adjusting the sliding bar
- due to the swivelling pressure plate for exact alignment of the workpiece

ROBUST TECHNOLOGY
Meeting the BESSEY quality promise was a focus in development, and so the transmission clamp is also a winning choice in terms of durability:

- due to the use of high-quality materials, such as fibreglass-reinforced polyamide for the top and bottom, as well as hardened, tempered and burnished steel for the profiled rails
- due to the sliding bar's plastic housing, the driving mechanism is protected from dust and splintering

GearKlamp GK

- High-quality two-component plastic handle positioned around the rail, so clamp can be used in tight spaces
- Clamping force up to 2,000 N
- Easy-to-move trapezoidal thread spindle with swivelling pressure plate
- Quick-release shift button to quickly adjust sliding bar

Order number	Opening	Throat depth	Rail	Weight
	mm	mm	mm	kg
GK15	150	60	19x6	0.618
GK30	300	60	19x6	0.727
GK45	450	60	19x6	0.837
GK60	600	60	19x6	0.942

Clamping with one hand

THE SECOND HAND REMAINS FREE

One-handed clamps are ideal for all work that has to be carried out with one hand – e.g. for overhead work or when another tool has to be used at the same time when aligning. BESSEY offers a wide variety of one-handed clamp models for many areas of application. These include, for example, the EHZ one-handed clamp developed on the basis of the BESSEY all-steel clamp. In addition to its pump lever, it also has a 2-component plastic handle and can therefore clamp workpieces with up to 3,500 N power. The EZS, DUO, EZ and EZ360 one-handed clamp series can both clamp and spread, guarantee a secure hold and are also gentle on sensitive surfaces thanks to their large, soft protective caps. All BESSEY one-hand clamp models are characterized by unique technical refinements and therefore meet individual requirements for comfort and reliability.

One-handed clamp EHZ with 2-component handle

- Clamping force of up to 3,500 N
- Clamp and fix in place quickly and simply with just one hand
- With protection caps on the clamping surfaces

Order number	Opening	Throat depth	Rail	Weight
	mm	mm	mm	kg
EHZ30-2K	300	100	19.5x9.5	1.250
EHZ60-2K	600	100	19.5x9.5	1.670

It's got the knack

ALL-ROUND FLEXIBLE USE
The EZ360 one-handed clamp is extremely versatile:

- thanks to innovative 360° turning mechanism to perfectly adjust the handle position to the clamping task
- thanks to long protective caps to protect the workpiece surface and distribute the clamping force of up to 1,400 N
- by changing the upper part from clamping to spreading thanks to the push-button release mechanism

EXTREMELY CONVENIENT HANDLING
On the one hand, the handle can be positioned in such a way that an optimal pumping position and thus better application of force is achieved. On the other hand, the handle can also be swivelled out of the working area after the clamping process, thus enabling several clamps to be placed in a very confined space:

- due to the extra-long high-quality 2-component plastic handle with pump lever, which can be turned completely around the rail and securely locked in 12 positions
- due to the release lever on the sliding arm for quick adjustment of the opening and release of the clamp

ROBUSTNESS IN A UNIQUE LOOK
Where dynamic design meets durability:

- due to the use of high-quality materials, such as fibreglass-reinforced polyamide for the top and bottom, as well as hardened, tempered, and burnished steel for the profiled rails
- due to the plastic housing, the grip mechanism is protected from dust and chips

One-handed clamp with rotating handle EZ360

- Innovative 360° rotating mechanism allows the handle unit to be placed around the rail – already before but also after fastening the clamp
- 12-step latching mechanism to securely hold the selected handle position
- Large clamping surfaces with removable protective caps
- Clamping force up to 1,400 N
- Can be repositioned for spreading – without tools thanks to simple release mechanism by push-button on the top part
- One-handed operation with little effort required

	Item number	Opening a	Throat depth b	Spreading width e	Rail x	Clamping force	Content	Weight
		mm	mm	mm	mm	N		kg
NEW	EZ360S-11SET	110	40	104–208	7x2,5	400	2 x EZ360S-11	0.230
NEW	EZ360M-15	150	60	154–302	14x5	750	–	0.410
NEW	EZ360M-30	300	60	154–454	14x5	750	–	0.480
	EZ360-15	150	80	195–315	18x5	1400	–	0.790
	EZ360-30	300	80	195–465	18x5	1400	–	0.870
	EZ360-45	450	80	195–615	18x5	1400	–	1.005
	EZ360-60	600	80	195–765	18x5	1400	–	1.095

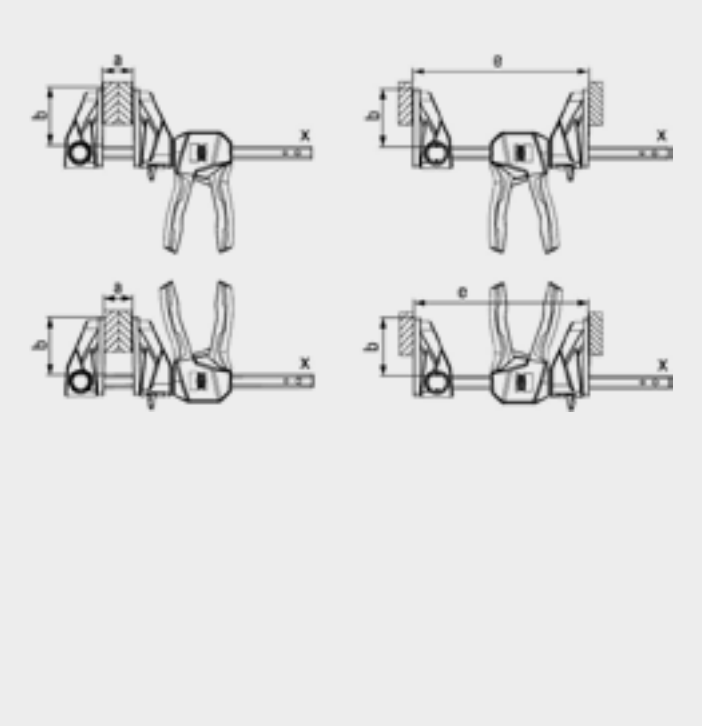

In 4 sizes and 10 variants

MULTIPLE APPLICATIONS
The one-handed EZ range offers numerous possible applications:

- due to a diverse range in four sizes with clamping widths from 110 to 900 mm and clamping forces from 200 N to 2,700 N
- due to the cross prism integrated in the plastic protective caps for the secure fastening of round, pointed and angular pieces
- due to conversion of the top section from clamping to spreading – with sizes EZM, EZL and EZXL tool-free thanks to release mechanism at the touch of a button

PRACTICAL CONVENIENCE
The entire range offers ergonomic handling, thanks to sophisticated technology:

- due to the high quality 2-component plastic handle with pump lever behind the rail for safe access from both directions
- due to the release handle integrated in the grip for quick adjustment of the sliding bar and for releasing the clamp

ROBUST DESIGN
Modern aesthetics meet with longevity here:

- due to the use of high-quality materials, such as fibreglass-reinforced polyamide for the top and bottom, as well as hardened, tempered, and burnished steel for the profiled rails
- due to the plastic housing, the grip mechanism is protected from dust and chips

One-handed clamp EZ

- Clamping force up to 200 N / 20kg (EZS11-4), 750 N / 75kg (EZM), 1,400 N / 140kg (EZL), 2,700 N / 270kg (EZXL)
- Conversion for spreading – tool-free with EZM, EZL, EZXL thanks to simple release mechanism at the touch of a button on the top section
- Ergonomically shaped 2-component plastic handle with pump mechanism and integrated release lever behind the rail
- Protective caps with cross prism on the top for securely holding round, pointed and angular parts
- One-handed operation with little effort required

Item number	Opening a	Throat depth b	Spreading width e	Rail x	Clamping force	Content	Weight
	mm	mm	mm	mm	N		kg
EZS11-4SET	110	40	80–190	7x2,5	200	2 x EZS11-4	0.120
EZM15-6	150	60	125–270	14x5	750	–	0.310
EZM30-6	300	60	125–420	14x5	750	–	0.380
EZL15-8	150	80	160–300	18x5	1400	–	0.580
EZL30-8	300	80	160–450	18x5	1400	–	0.680
EZL45-8	450	80	160–500	18x5	1400	–	0.770
EZL60-8	600	80	160–750	18x5	1400	–	0.860
EZXL30-9	300	90	195–790	22x8	2700	–	1.240
EZXL60-9	600	90	195–790	22x8	2700	–	1.570
EZXL90-9	900	90	195–1090	22x8	2700	–	1.900

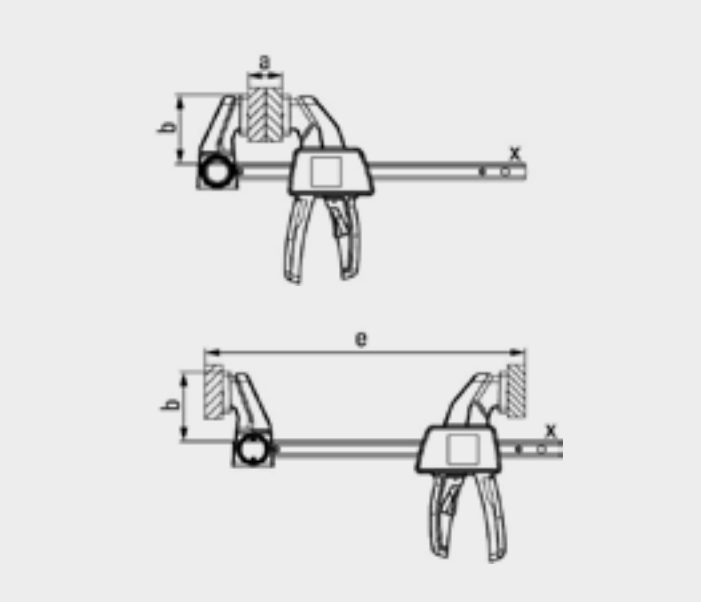

NEW One-handed clamp set EZM-EZL-SET

- Set contains four one-hand clamps from the EZ series: 2 x EZM15-6 and 2 x EZL30-8

Item number	Content	Weight
		kg
EZM-EZL-SET	2 x EZM15-6 / 2 x EZL30-8	1.980

Installation kit for decking boards EZ-TD

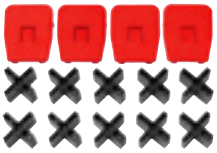

- Accessories for BESSEY EZ360 and EZL one-handed clamps (from 300 mm opening)
- For fast and precise adjustment of decking boards up to 20 cm width
- For 6, 7, 8 and 10 mm (1/4", 9/32", 5/16" and 3/8") spacing between decking boards
- Tool-free assembly

Order number	Suitable for	Content	Weight
			kg
EZ-TD	EZ360 and EZL (from 300 mm opening)	4 x Special protective cap / 10 x Spacer	0.273

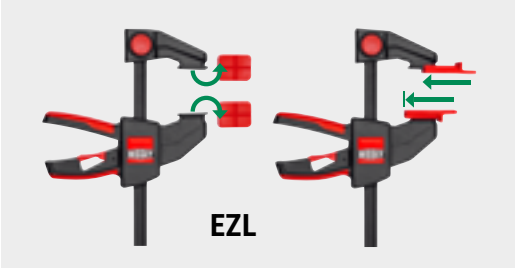

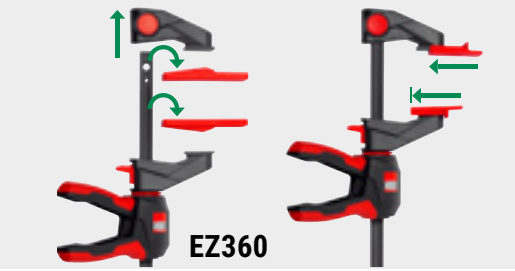

One-handed clamp DuoKlamp DUO

- Clamping force up to 1,200 N
- Change from clamping to spreading by switching, not converting
- Handle with pump lever parallel to the rail
- Convenient one-handed operation, with little effort required
- All-round clamping – in front of, behind and at the side of the rail

Order number	Opening a	Throat depth b	Spreading width e	Spreading width rear f	Rail x	Weight
	mm	mm	mm	mm	mm	kg
DUO16-8	160	85	75–235	9–170	15x5	0.655
DUO30-8	300	85	75–380	9–315	15x5	0.738
DUO45-8	450	85	75–535	9–470	15x5	0.825
DUO65-8	650	85	75–685	9–660	15x5	1.020

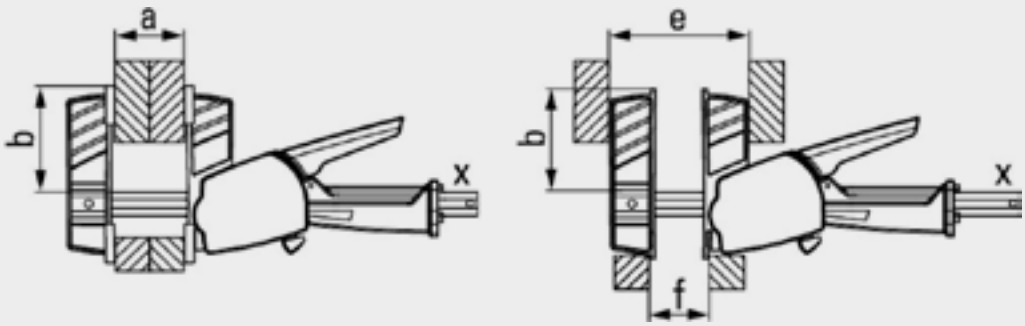

One-handed clamp EZS

- Clamping force up to 2,000 N
- No tools required for spreading thanks to intelligent release mechanism in upper section
- Ergonomically shaped 2-component plastic handle behind the rail

Order number	Opening a	Throat depth b	Spreading width e	Rail x	Weight
	mm	mm	mm	mm	kg
EZS15-8	150	80	170–360	19x6	0.720
EZS30-8	300	80	170–510	19x6	0.825
EZS45-8	450	80	170–660	19x6	0.930
EZS60-8	600	80	170–810	19x6	1.040
EZS90-8	900	80	170–1110	19x6	1.255

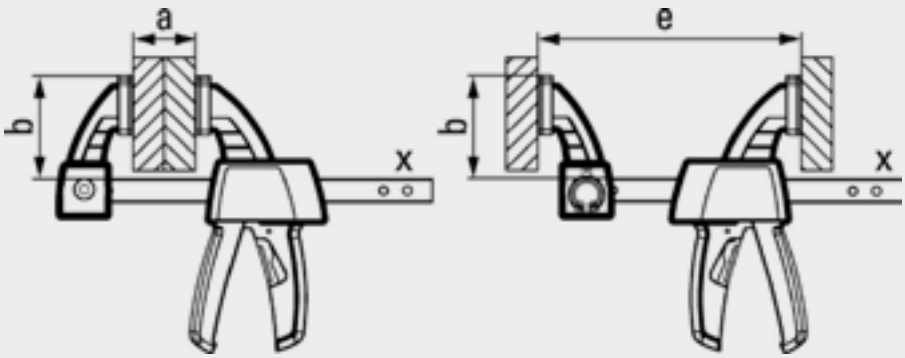

Tensioning rafters and beams

POWERFUL AND VERSATILE

The BESSEY Rafter clamp is the indispensable and versatile professional for roof and timber constructions. With its movable sliding bracket, it becomes an extremely fast „beam puller“: simply hammer in the tip, retract the clamp, clamp powerfully, done!

Rafter clamp SPZ

- Clamping force up to 12,000 N
- For all roofing and timber frame constructions
- SPZ 80 K with 17 mm hexagonal bolt and heat-resistant pressure plate with sintered steel insert, which can be tilted up to 35°

Order number	Opening	Throat depth	Rail	Weight
	mm	mm	mm	kg
SPZ60K	600	120	27x13	2.900
SPZ80K	800	140	30x15	5.000

Special pressure plate

- Long service life thanks to heat-resistant special pressure plate with sintered steel insert

Various designs:
- Smooth faced, standard version (can be swivelled up to 35°)
- Rough faced for secure clamping on dirty surfaces (can be swivelled up to 35°)
- V-groove face for round, oval and edged workpieces (can be swivelled up to 35°)
- Rigid design with smooth surface

Order number	Version	Suitable for	Weight
			kg
3100736	standard	SLM, SGM, SGTM, STBM, STBVC, SGU, SLV, GSV, SPZ80K, TWM	0.226
3102127	rigid	SLM, SGM, SGTM, STBM, STBVC, SGU, SLV, GSV, SPZ80K, TWM	0,223
3100737	standard	STBS, STBU	0.264
3101192	serrated	SLM, SGM, SGTM, STBM, STBVC, SGU, SLV, GSV, SPZ80K, TWM	0.180
3101193	v-grooved	SLM, SGM, SGTM, STBM, STBVC, SGU, SLV, GSV, SPZ80K, TWM	0.269

Stretch with ease

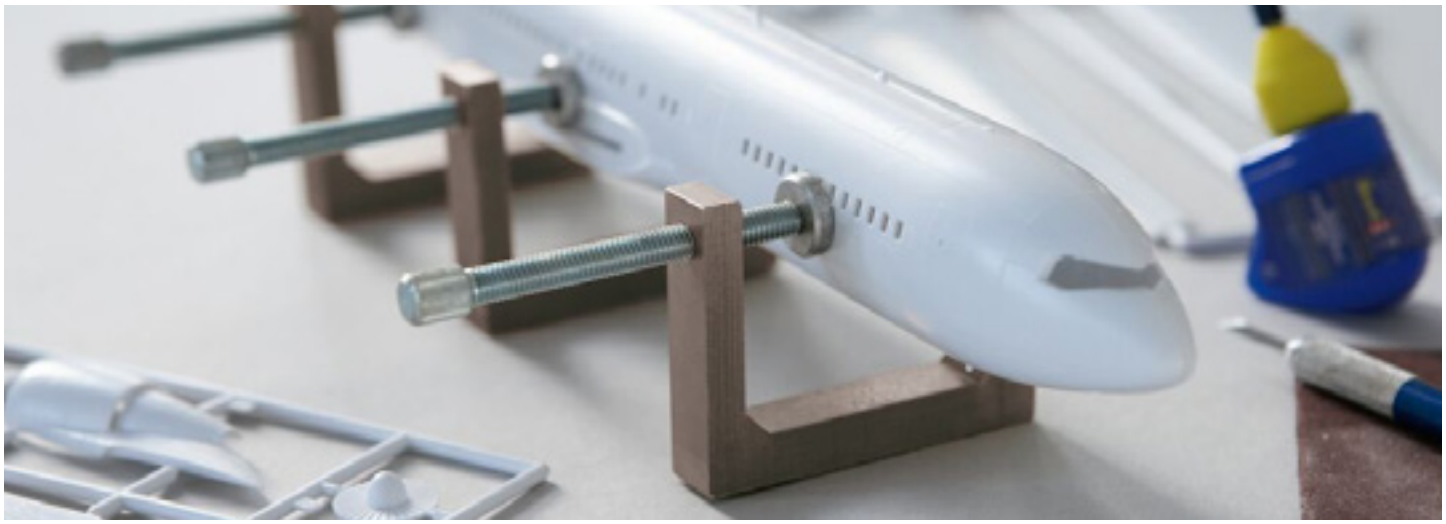

APPLICATION-ORIENTED CLAMPING SOLUTIONS

Thanks to BESSEY's ongoing development work, new innovative clamping tools are constantly being created. The focus is not on strength, but rather on user-friendly, easy handling. In addition to the classic Die-cast zinc screw clamp LM, BESSEY therefore also offers a U-shaped screw clamp in its range of lightweight clamps. Thanks to its U-shaped fixed bracket, the LMU also enables overlapping clamping work with a clamping force of up to 1,500 N. The BESSEY range also includes clamps with upper and lower parts and eccentrics made of high-quality hardwood. Parallel screw clamps and mini clamps made of aluminum are also available for model makers and hobbyists.

Light duty bar clamp U-style LMU

- Clamping force up to 1,500 N
- Step-over clamping
- Comes with two protective caps
- Small and easy to handle
- Light weight

Order number	Opening	Throat depth	Rail	Weight
	mm	mm	mm	kg
LMU10/5	100	50	15x5	0.230
LMU15/5	150	50	15x5	0.270
LMU20/5	200	50	15x5	0.292

The Light duty bar clamp U-style LMU will be delivered in an attractive sales presenter. Sale to dealers in packaging units only.

Die-cast zinc screw clamp LM

- Clamping force up to 1,500 N
- Clamping arms manufactured in toughened die cast zinc black powder coated to prevent chemical corrosion
- Comes with protective cap
- Small and easy to handle
- Light weight

Order number	Opening	Throat depth	Rail	Weight
	mm	mm	mm	kg
LM10/5	100	50	15x5	0.240
LM15/5	150	50	15x5	0.270
LM20/5	200	50	15x5	0.296
LM25/5	250	50	15x5	0.323
LM30/5	300	50	15x5	0.348
LM15/8	150	80	20x5	0.510
LM20/8	200	80	20x5	0.550
LM25/8	250	80	20x5	0.595
LM30/8	300	80	20x5	0.635
LM20/10	200	100	25x6	0.900
LM25/10	250	100	25x6	0.950
LM30/10	300	100	25x6	1.015
LM40/10	400	100	25x6	1.100
LM50/10	500	100	25x6	1.235
LM60/10	600	100	25x6	1.300
LM80/10	800	100	25x6	1.580

Wood Klemmy HKL

- Upper and lower arms and lever made from high-quality hardwood
- Cork pads for gentle clamping

Order number	Opening	Throat depth	Rail	Weight
	mm	mm	mm	kg
HKL20	200	110	20x5	0.320
HKL30	300	110	20x5	0.460
HKL40	400	110	20x5	0.540
HKL60	600	110	20x5	0.695
HKL80	800	110	20x5	0.855
HKL100	1000	110	20x5	0.995

Aluminium mini clamp AM

- Ideal for modelling and hobbyists
- Low weight of just 55 g

Order number	Opening	Throat depth	Weight
	mm	mm	kg
AM4	47	34	0.055

Parallel screw clamp PA

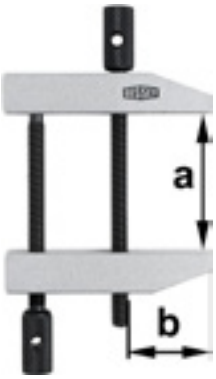

- Twin spindles
- Precisely parallel positioning of the jaw faces

Order number	Opening	Throat depth	Weight
	mm	mm	kg
PA28	36	19	0.075
PA40	46	26	0.100
PA55	60	35	0.180
PA70	87	50	0.430
PA105	116	72	0.920

Clamp comfortably with constant clamping force

SMALL CLAMPS – BIG EFFECT

Spring and ratchet clamps from BESSEY hold workpieces firmly together with constant clamping force. The spring clamps sit comfortably in the hand and grip powerfully even with large clamping widths. The VarioClippix XV is available in two versions – either with one or two infinitely adjustable clamping arms. With a clamping width of 170 mm, it can still be operated with one hand. The Clippix XCL is equipped with long, pointed clamping arms. This allows you to work in narrow or deep spaces. As an all-rounder, the Clippix XC completes the BESSEY spring clamp range. And the XCR ratchet clamp also enables overlapping clamping thanks to its design.

Spring clamp VarioClippix XV

- Variable opening width up to 100 mm, yet can be operated with one hand
- Lightweight, functional and easy to handle
- Extremely sturdy

Order number	Opening	Opening	Throat depth	Throat depth	Clamping force	Weight
	mm	Inch	mm	Inch	N	kg
XV3-50	55	2	37	1 1/2	80	0.070
XV5-100	100	4	50	2	120	0.167

Spring clamp VarioClippix XV

- Variable opening width up to 170 mm, yet can be operated with one hand
- Lightweight, functional and easy to handle
- Extremely sturdy

Order number	Opening	Opening	Throat depth	Throat depth	Clamping force	Weight
	mm	Inch	mm	Inch	N	kg
XV5-170	170	6 1/2	50	2	100	0.190

Spring clamp Clippix XC

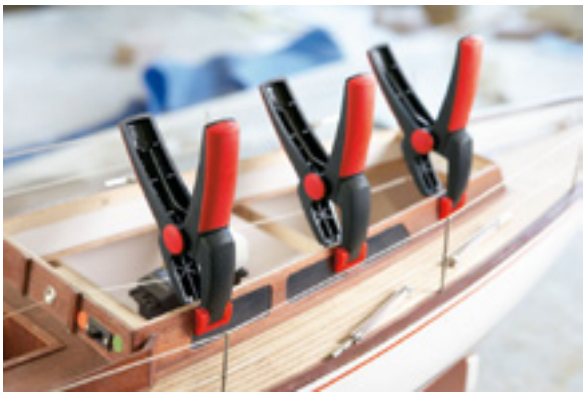

- Lightweight, functional and easy to handle
- Extremely sturdy

Order number	Opening	Opening	Throat depth	Throat depth	Clamping force	Content	Weight
	mm	Inch	mm	Inch	N		kg
XC1	20	3/4	20	3/4	20	–	0.010
XC1-SET	20	3/4	20	3/4	20	7 x XC1	0.055
XC2	25	1	30	1 1/8	40	–	0.018
XC3	35	1 3/8	37	1 1/2	80	–	0.054
XC5	50	2	50	2	120	–	0.119
XC7	75	3	70	2 3/4	170	–	0.181

Needle nose spring clamp Clippix XCL

- Long, pointed clamping arm for working in tight spaces
- Large throat depth for clamping in borderless areas
- Soft, slip-proof grip pads

Order number	Opening	Opening	Throat depth	Throat depth	Content	Weight
	mm	Inch	mm	Inch		kg
XCL2	55	2	60	2	–	0.020
XCL2-SET	55	2 1/8	60	2 3/8	2 x XCL2	0.036
XCL5	70	3	110	4	–	0.138

Spring clamp XM

- XM3EU: Clamping force up to 100 N / 10 kg
- XM5EU: Clamping force up to 120 N / 12 kg
- XM7EU: Clamping force up to 150 N / 15 kg
- Tips and handles made of PVC prevent marring
- Heavy duty springs for firm grip and powerful clamping
- Corrosion resistant nickel plated

Order number	Opening	Opening	Throat depth	Throat depth	Weight
	mm	Inch	mm	Inch	kg
XM3EU	25	1	32	1 1/4	0.073
XM5EU	50	2	57	2 1/4	0.166
XM7EU	75	3	85	3 5/16	0.300

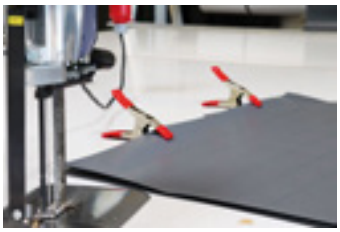

Ratchet clamp XCR

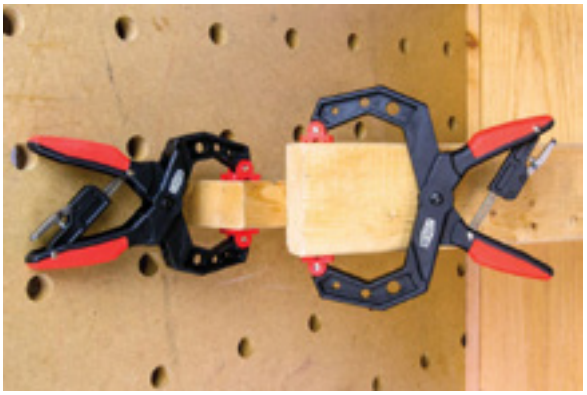

- Ideal for light clamping work that requires a greater throat depth and for workpiece-friendly clamping
- Comfortable handling thanks to ergonomic 2-component plastic handle and one-hand operation
- Quick opening and closing thanks to robust ratchet mechanism
- Twice as strong compared to conventional spring clamps

Order number	Opening	Opening	Throat depth	Throat depth	Weight
	mm	Inch	mm	Inch	kg
XCR2	55	2 1/4	50	2	0.200
XCR4	100	4	75	3	0.280

The mobile small parts clamping system

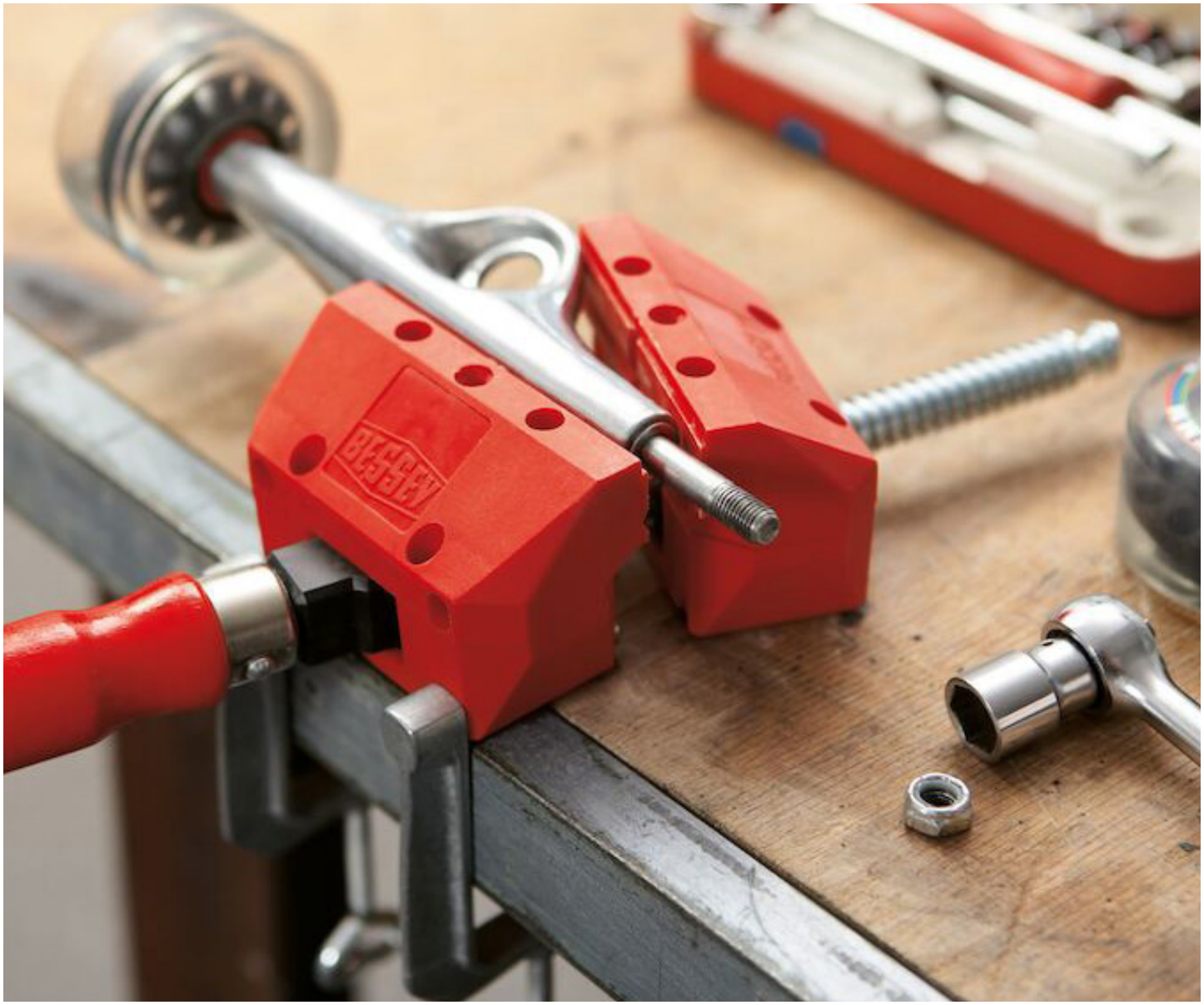

AN EXTRA HAND

The Mini Vice S10 is a mobile small parts clamping system. Whether straight, round or angled – there is nothing that the BESSEY Mini vice cannot hold. With the integrated guide rods, the mini vice is perfect for parallel clamping. The mini vice can even hold unusual objects such as wedge-shaped parts. The guide rods are simply removed and the 90 mm wide clamping jaws adapt to the angle of up to 25 degrees. When it comes to holding pipes or curved objects, the clamping jaws have vertical and horizontal cut-outs. The clamping force can be adjusted so finely with the large wooden handle that even watchmaking work is possible.

Mini Vice S10

- Low weight
- Parallel clamping with guide rods
- Clamping at an angle without guide rods (max. 25°)
- Easy to attach, with 2 table clamps supplied

Order number	Opening	Jaw width	Weight
	mm	mm	kg
S10-ST	100	90	0.825

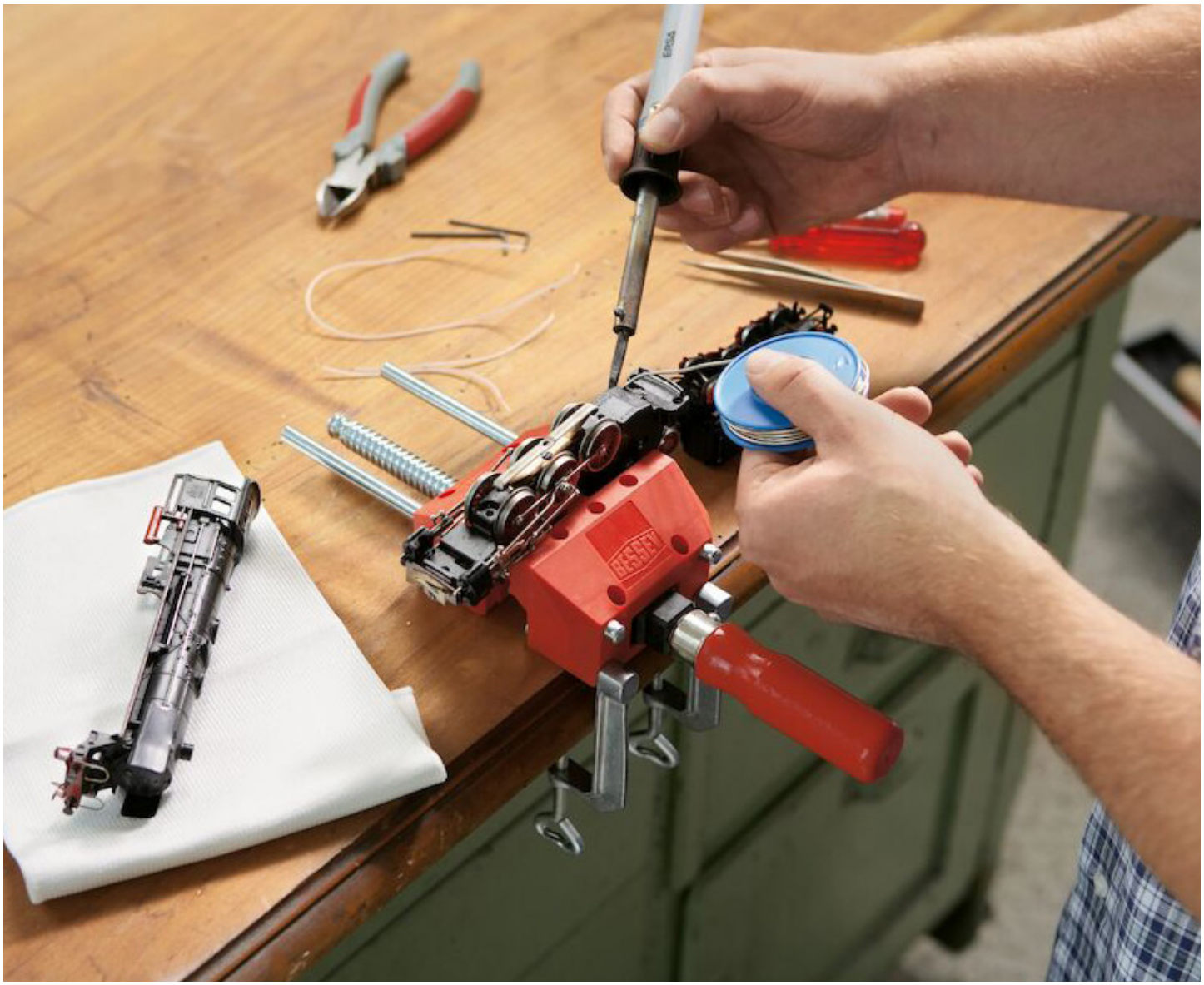

Fix guide rails and tension in profiles

FOR RAILS AND MUCH MORE

Sawing, cutting, grinding and other precision work require reliable fixing. BESSEY has developed its all-steel table clamps GTR with wooden handle and GTRH with lever handle especially for guide rails. But that's not all. As a one-handed clamp specialist, BESSEY also offers a very special table clamp version, the EZR. It offers far more than just convenient one-handed operation. The EZR can be used for other applications in addition to its actual purpose thanks to the various options for changing the top section and adapter. You can also carry out normal clamping and spreading work, even across different applications.

One clamp with many applications

VERSATILE USE

This clamp offers a variety of uses – both as a table clamp and as a one-handed clamp:

- with attachment on lower part and inverted upper part for secure fixing of guide rails of the brands Festool, Protool, Metabo, Makita, Hitachi/Hikoki, Dewalt etc. and for clamping in profiles as well as on work tables
- with additional adapter on the upper part also suitable for fixing Bosch, Flex and Mafell guide rails
- with attachment on upper or lower part for overlapping clamping
- Suitable for tensioning or spreading

CONVENIENT TECHNOLOGY

Ergonomic and safe handling, thanks to sophisticated technology:

- due to the high quality 2-part plastic grip with pump lever behind the rail for safe access from both directions
- due to the release handle integrated in the grip for quick adjustment of the sliding bar and for releasing the clamp
- due to the cross prism integrated in the plastic protective caps for the secure fastening of round, pointed and angular pieces

ROBUST DESIGN

Modern aesthetics meet with longevity here:

- due to the use of high-quality materials, such as fibreglass-reinforced polyamide for the top and bottom, as well as hardened, tempered, and burnished steel for the profiled rails
- due to the plastic housing, the grip mechanism is protected from dust and chips

NEW One-handed table clamp with rotating handle for guide rails EZR360

- For fixing guide rails from Festool, Shaper, Hilti, Milwaukee, Makita, Metabo, Hikoki, Einhell, DeWalt, etc. (groove dimensions 12 x 6.5 mm to 12 x 8 mm)
- Also suitable for Bosch, Flex, Mafell (groove dimensions 12 x 1.8 mm) thanks to included and slide-on adapter
- For clamping in profiles and on work tables
- Can be used as a normal one-handed clamp for clamping – also overlapping – and spreading
- Innovative 360° rotating mechanism allows the handle unit to be placed around the rail – already before but also after fastening the clamp
- 2-step latching mechanism to securely hold the selected handle position
- Clamping force up to 750 N / 75 kg / 165 lbs

Item number	Opening	Throat depth	Spreading width	Rail	Content	Weight
	mm	mm	mm	mm		kg
EZR360-15SET	150	60	150–335	14x5	2 x EZR360-15 / 2 x Adapter	0.961

All-steel table clamp GTR

- Specially forged fixed arm for 12 x 8 mm grooves
- For secure fastening of guide rails from Festool, Protool, Metabo, Makita, Hitachi/Hikoki, etc. and for clamping in profiles as well as work tables
- Clamping force up to 1,800 N
- Ergonomically shaped wooden handle

Order number	Opening a	Throat depth b	Rail x	Content	Weight
	mm	mm	mm		kg
GTR12	120	60	13.5x6.5	–	0.300
GTR12SET	120	60	13.5x6.5	2 x GTR12	0.610
GTR16B6	160	60	13.5x6.5	–	0.320
GTR30B6	300	60	13.5x6.5	–	0.400

All-steel table clamp GTRH with lever handle

- Specially forged fixed arm for 12 x 8 mm grooves
- For secure fastening of guide rails from Festool, Protool, Metabo, Makita, Hitachi/Hikoki, etc. and for clamping in profiles as well as work tables
- Rapid – up to 5 times faster than conventional clamps
- Secure – unaffected by vibrations
- Strong – clamping force up to 2.400 N

Order number	Opening a	Throat depth b	Rail x	Weight
	mm	mm	mm	kg
GTR16S6H	160	60	13.5x6.5	0.515

GTR / GTRH

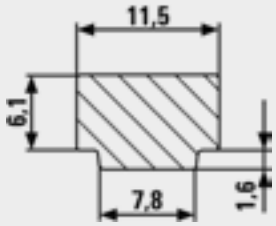

Tensioning frames and curves

UNIFORM AND DISTORTION-FREE CLAMPING ON BOTH SIDES

Clamping curves, polygonal joints or closed contours is traditionally one of the most difficult clamping tasks. These projects are simply more successful when special tools from BESSEY are used, such as the Band clamp BAN700 with its practical Vario corners. This duo is suitable wherever gentle and distortion-free all-round clamping is required – for wood, plastic and metal work. Secured by an automatic self-locking mechanism that guarantees even tension on both sides and only releases when the tension is released. No distortion and no stress!

Band clamp BAN700

- Even pressure on mitre joints
- Crank handle can be relocated for right and left-handed users
- Contains: 1 band clamp, 4 Vario corners

Order number	Clamping range	Band	Angle	Weight
	mm	mm		kg
BAN700	up to 7 m	25x1	60°–180°	0.555

Band clamp BAN400

- Clamp right-angled workpieces with 4 plastic corners
- Even pressure at all 4 corners

Order number	Clamping range	Band	Weight
	mm	mm	kg
BAN400	up to 3.8 m	24x1	0.541

Vario corners BVE (6 pcs./bag)

- Infinite angle adjustment from 60-180°

Order number	Band	Angle	Suitable for	Weight
	mm			kg
BVE	25x1	60°–180°	BAN700, BAN400	0.100

Clamping angles and miters

ADEQUATELY SOLVE THE MOST DEMANDING TASKS

From clamping workpieces of different thicknesses to clamping directly in the mitre and clamping a wide variety of angles: BESSEY has the right solution for all these demanding clamping tasks with first-class special tools. Whether angle clamps or mitre clamps – we know what you really need!

Angle clamp WS

- Automatic adjustment to workpieces of various thicknesses
- Quick – clamp with a spindle
- Stable body
- For attaching with table clamps – available as an accessory

Order number	Opening a	Jaw height	Current passage m	Weight
	mm	mm	mm	kg
WS3	2x55	30	30	0.960
WS6	2x100	36	60	1.960

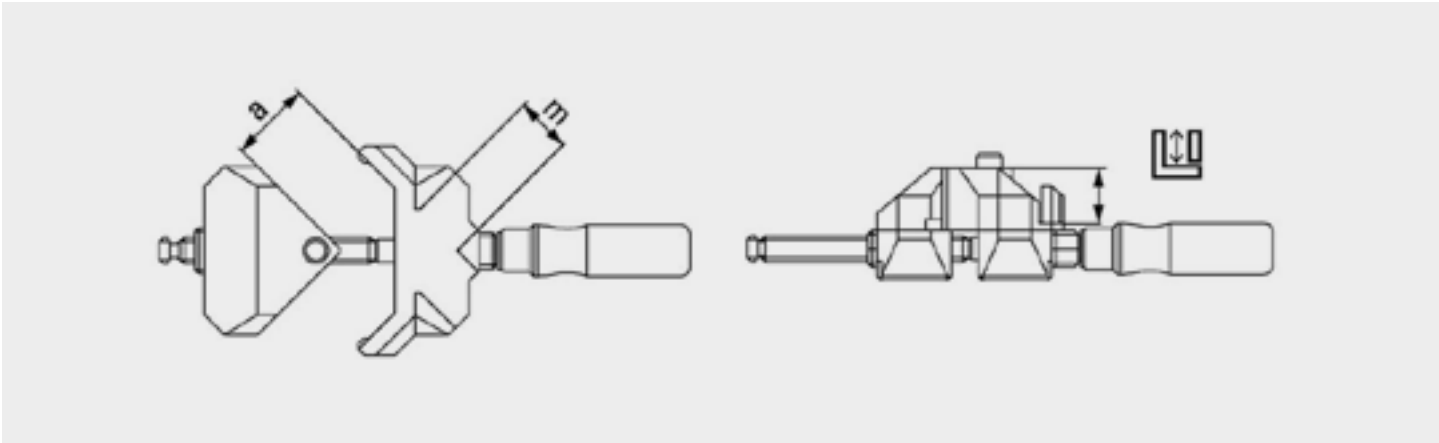

Angle clamp WS

- Clamp variously-sized workpieces with 2 spindles
- For light clamping work
- Made from die-cast zinc

Order number	Opening a	Jaw height	Weight
	mm	mm	kg
WS1	2x73	12	0.238

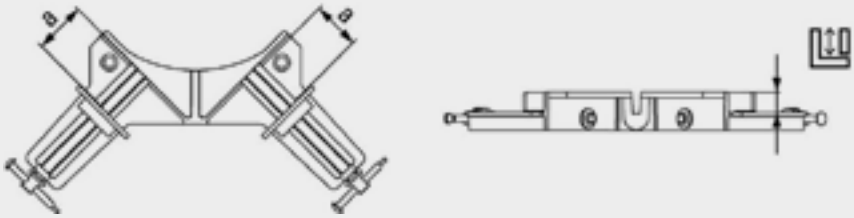

Mitre clamping system MCX

- Mitre system for 22.5°, 30°, 45° and 60°angles
- Even pressure on the mitre
- Angle adapter can be changed without tools
- Practical accessory for BESSEY screw clamps TG,GZ, GMZ, EZ360, EHZ, EZS, DUO and EZL/EZXL

Order number	Angle	Opening	Weight
		mm	kg
MCX	22.5° / 30° / 45° / 60°	100	0.700

Tension edges and end faces

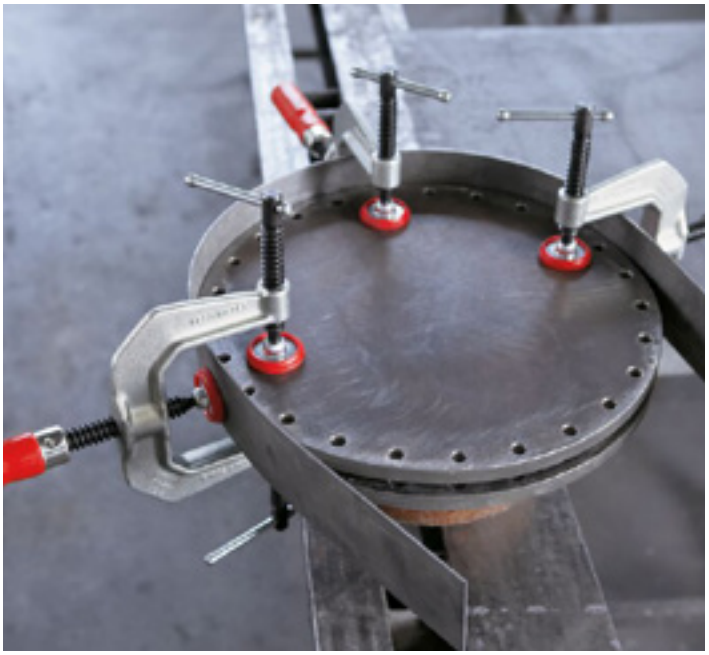

SOLVE SPECIAL TASKS SIMPLY AND EASILY

Special tasks and applications often require the use of special tools. That's why BESSEY offers handy, lightweight edge clamps for clamping edges and end faces. Even with one-handed operation on request. Specially developed to make your everyday work even simpler and easier!

One-handed edge clamp EKT

- For rapid one-handed operation
- Low weight
- Opening up to 55 mm

Order number	Opening	Throat depth	Weight
	mm	mm	kg
KF2	10–40	80	0.820

Edge clamp Kantenfix KF

- For quick one-handed operation
- Widths up to 80 mm

Order number	Opening	Throat depth	Weight
	mm	mm	kg
KF2	10–40	80	0.680
KF4	10–80	110	1.480

Edge clamp KT

- Practical accessory for clamping edges and difficult to reach areas
- Suitable for conventional screw clamps with a max. rail thickness of 13 mm

Order number	Version	Weight
		kg
KT5-1CP	1 Spindle	0.350
KT5-2	2 Spindles	0.580

C-frame edge clamp KT

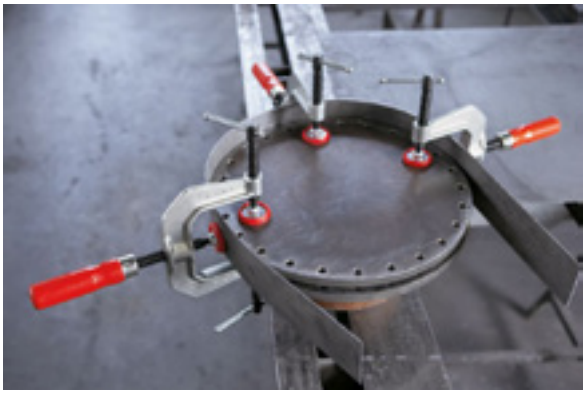

- Three-spindle C-frame clamp
- Extra strong, with forged frame
- Universally applicable within the fields of wood and metal processing
- Suitable for welding

Order number	Opening	Throat depth	Weight
	mm	mm	kg
KT8-3	80	80	2.365

Safe and variable clamping on workbenches

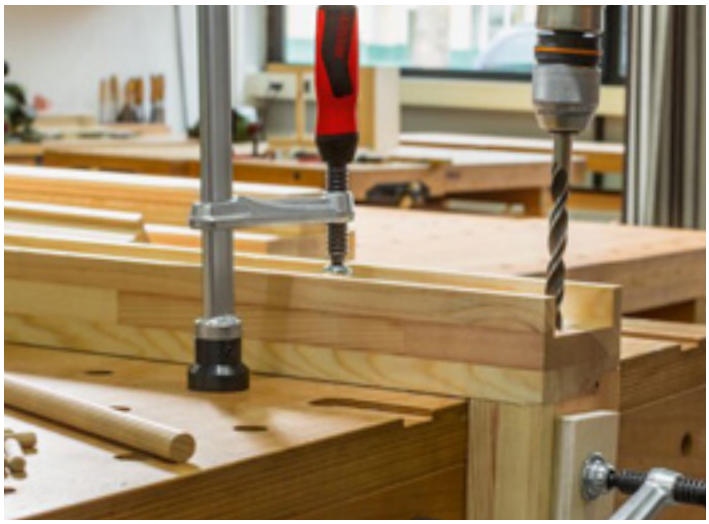

A NEW TAKE ON THE TRIED AND TESTED

Anyone looking for a solution for fixing workpieces on workbenches with a hole system will also find what they are looking for at BESSEY. Clamping elements from the TWV (variable throat depth) and TW (fixed throat depth) series developed for welding tables can be used in conjunction with an adapter on many common workbenches. The proven BESSEY all-steel clamps were the inspiration for the development of the clamping elements. The unique BESSEY steel quality guarantees a dimensionally stable and torsion-resistant tool. The tried and tested handle variants, such as 2-component plastic, toggle or lever handles, are also available. Whichever clamping element is chosen, each one can be integrated on the workbench without tools using the adapter – exactly where it is needed to securely hold the workpiece in place. This is the perfect way to master drilling, planing or sanding work.

Clamping element with variable throat depth TWV

- TWV16: Clamping force up to 2,500 N
- Precise, individual clamping
- Tempered profile and sliding arm for sprung and elastic clamping
- Infinitely adjustable throat depth
- Various design versions:
- High quality 2-component plastic handle and tommy bar with rounded ends – each with smooth-running trapezoidal threaded spindle and tool-free pressure plate replacement
- Lever handle with an indexing mechanism for controlled, fast and vibration-proof clamping

Order number	Bolt Ø	Opening a	Throat depth b	Rail x	Weight
	mm	mm	mm	mm	kg
TWV16-20-15-2K	16	200	30–150	22x8.5	1.120
TWV16-20-15K	16	200	30–150	22x8.5	1.040
TWV16-20-15H	16	200	60–150	22x8.5	1.210

3D CAD data in the download area of the BESSEY website

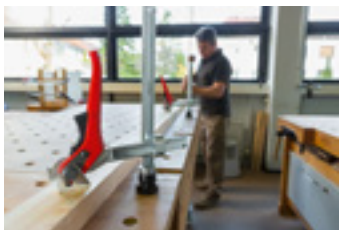

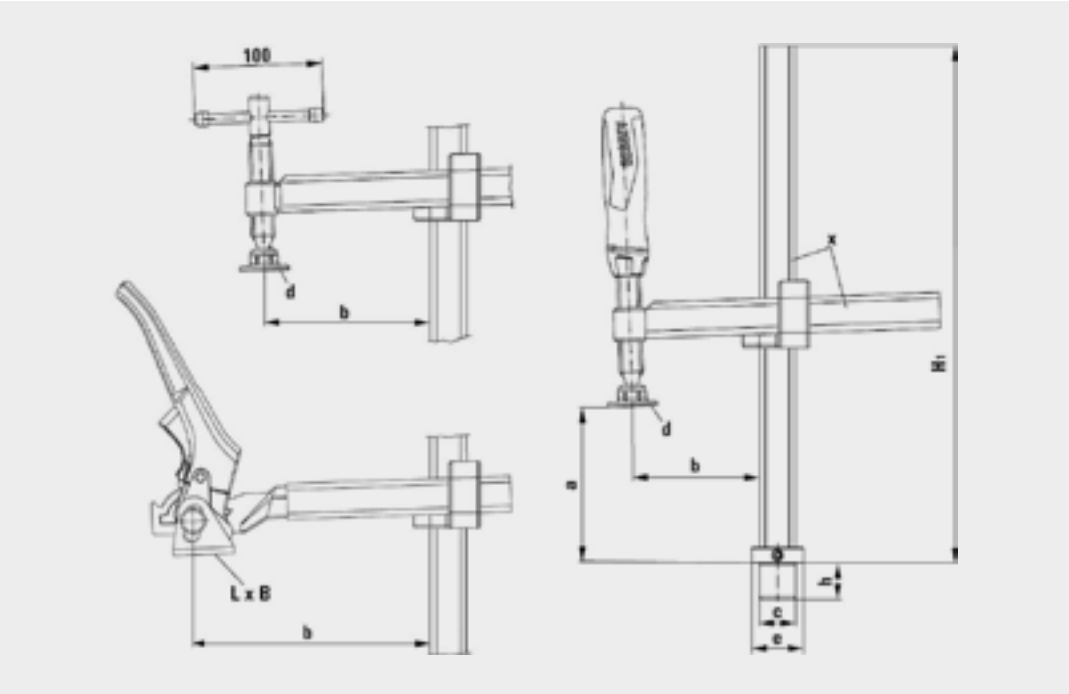

Table of dimensions TWV16

	Bolt Ø	Bolt height	Clamping height	Throat depth	Height of base	Pressure plate dimensions		Foot F		Rail profile
	c	h	a	b	H1	L x B	Ø d	Foot Ø e	Foot height	x
	mm	mm	mm	mm	mm	mm	mm	mm	mm	mm
TWV16-20-15-2K	16	20.5	200	30–150	265	–	32	30	10	22 x 8.5
TWV16-20-15K	16	20.5	200	30–150	265	–	32	30	10	22 x 8.5
TWV16-20-15H	16	20.5	200	60–150	265	41 x 26	–	30	10	22 x 8.5

Clamping element with fixed throat depth TW

- TW16 + TW22: Clamping force up to 3,000 N
- Precise, individual clamping
- Tempered profile and sliding arm for sprung and elastic clamping
- Various design versions:
- High quality 2-component plastic handle and tommy bar with rounded ends – each with smooth-running trapezoidal threaded spindle and tool-free pressure plate replacement
- Lever handle with an indexing mechanism for controlled, fast and vibration-proof clamping
- TW22: Compatible with Barth and Beck lift tables

Order number	Bolt Ø	Opening a	Throat depth b	Rail x	Weight
	mm	mm	mm	mm	kg
TW16-20-10-2K	16	200	100	22x8.5	0.930
TW16-20-10K	16	200	100	22x8.5	0.860
TW16-20-10H	16	200	100	22x8.5	1.010
TW22-20-10-2K	22	200	100	22x8.5	0.995

3D CAD data in the download area of the BESSEY website

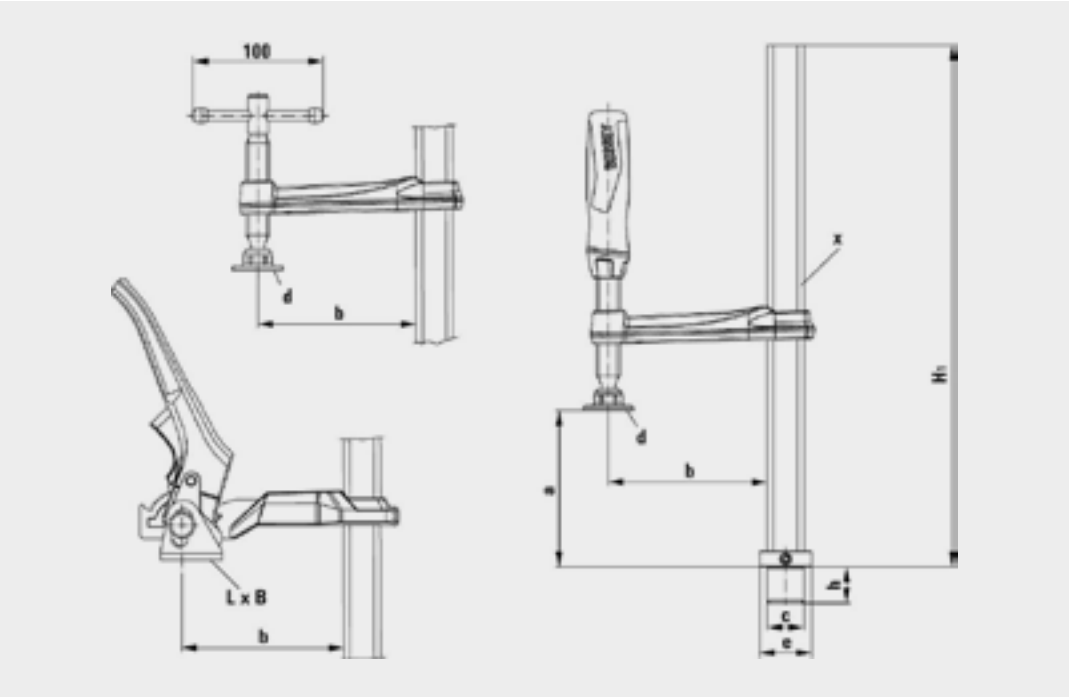

Table of dimensions TW16 / TW22

	Bolt Ø	Bolt height	Clamping height	Throat depth	Height of base	Pressure plate dimensions		Foot F		Rail profile
	c	h	a	b	H1	L x B	Ø d	Foot Ø e	Foot height	x
	mm	mm	mm	mm	mm	mm	mm	mm	mm	mm
TW16-20-10-2K	16	20.5	200	100	265	–	32	30	10	22 x 8.5
TW16-20-10K	16	20.5	200	100	265	–	32	30	10	22 x 8.5
TW16-20-10H	16	20.5	200	100	265	41 x 26	–	30	10	22 x 8.5
TW22-20-10-2K	22	29	200	100	285	–	32	30	8	22 x 8.5

Workbench adapter TW16AW

- Accessories for BESSEY TWV and TW clamping elements with 16 hole system
- Suitable for all common workbenches with a hole system
- Can be used without tools
- The stud pin can be changed to use other hole systems

Order number	Bolt Ø	Suitable for	Suitable for	Weight
	mm	mm	Inch	kg
TW16AW19	16	19	3/4	0.332
TW16AW20	16	20	13/16	0.336
TW16AW30	16	30	1 3/16	0.518

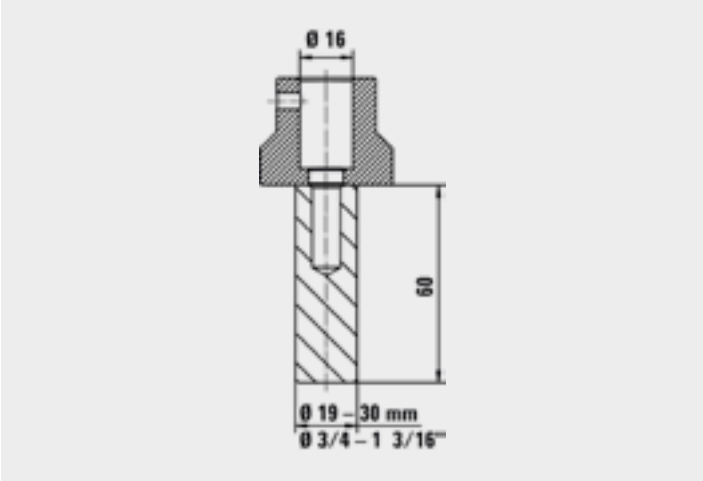

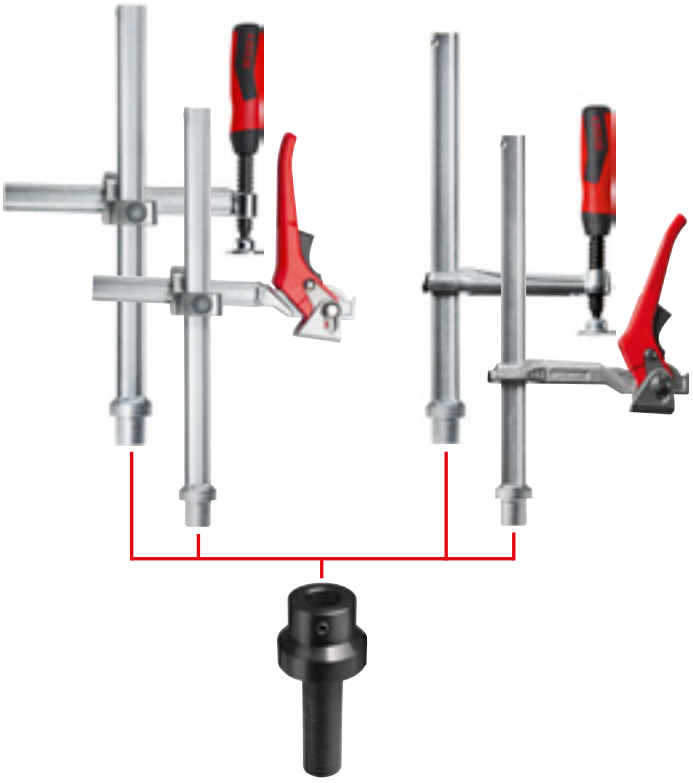

Tensioning on multifunctional tables

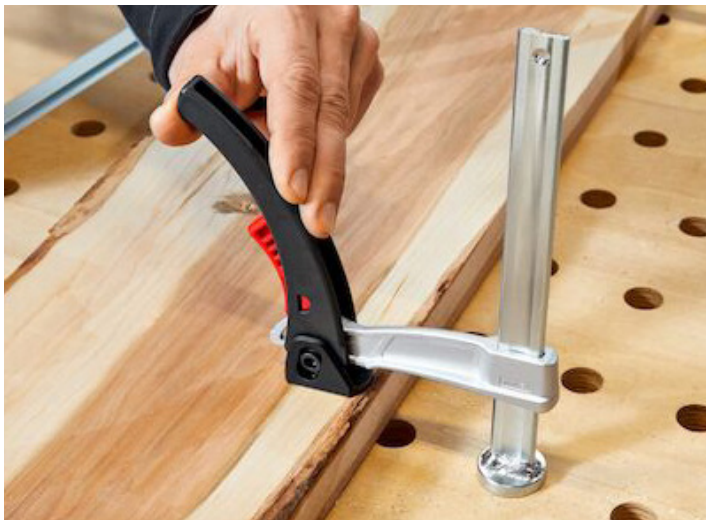

ALWAYS HAVE YOUR OWN WORKSHOP WITH YOU

Clamping tools are indispensable when working on multifunction tables and BESSEY has a number of specialists in its range. In addition to table clamps in proven all-steel quality, there are also special tools that can be inserted directly into tables with a 20 mm hole diameter using a bolt. These include the STC Toggle clamps combined with an adapter, the high-tech TW-KLI Lever clamps and the WNS Horizontal fixture clamp. With these practical aids, tradespeople are well equipped on any construction site and can work quickly and precisely on multifunctional tables.

Horizontal fixture clamp WNS-SET-MFT

- Clamping force up to 750 N
- For using on multifunction tables such as Festool MFT and Sortimo WorkMo with hole diameter of 20 mm and plate thickness of min. 19 mm
- Quick fixing thanks to clamping levers on the side
- Makes full-surface working of the workpiece possible – even round and flat parts
- Patented pull-down mechanism prevents the workpiece from lifting from the table surface when clamping – even without fastening screws
- Bench dog BH-MFT can also be used as a universal limit stop for workpieces

Order number	Bolt Ø	Content	Weight
	mm		kg
WNS-SET-MFT	20	2 x Horizontal fixture clamp / 2 x Bench dog / 4 x Knurled nut	0.920

Bench dog for multifunctional tables BH-MFT

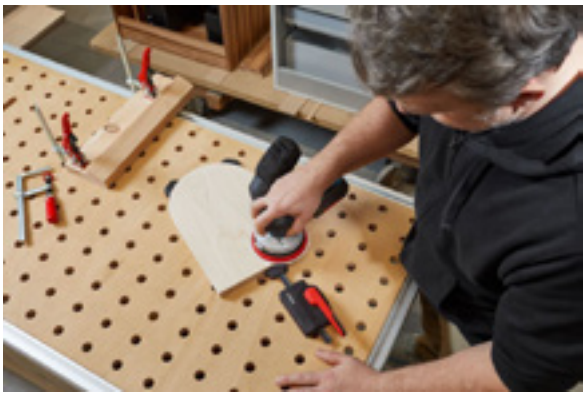

- Accessory for BESSEY horizontal fixture clamps WNS-SET-MFT
- For using on multifunction tables such as Festool MFT and Sortimo WorkMo with hole diameter of 20 mm and plate thickness of min. 19 mm
- Can also be used as a universal limit stop for workpieces

Order number	Bolt Ø	Content	Weight
	mm		kg
BH-MFT	20	4 x Bench dog / 4 x Knurled nut	0.244

Clamping element for multifuncion tables TW-KLI

- Clamping force up to 500 N
- For using on multifunction tables such as Festool MFT and Sortimo WorkMo with hole diameter of 20 mm and plate thickness of min. 19 mm
- Stable sliding arm made of light magnesium for rapid, vibration-proof clamping
- Profile made of cold-drawn quality steel for flexible and elastic clamping
- M8 thread on the underside of the bolt enables additional securing of the clamping element on the multifunction table

Item number	Bolt	Opening	Throat depth	Rail	Weight
	mm	mm	mm	mm	kg
TW20-15-8KLI-SET	20	150	80	20x5	0.620

NEW Clamping tool set for working on the table MFT-A

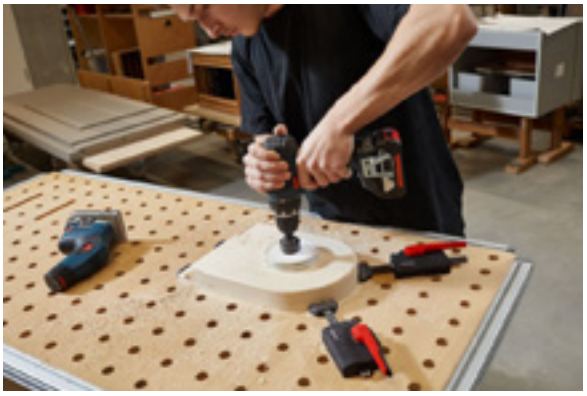

- Set contains four clamping tools for 20 mm hole diameters: 1 x WNS-SET-MFT and 1 x TW20-15-8KLI-SET

Item number	Content	Weight
		kg
MFT-A	1x WNS-SET-MFT / 1x TW20-15-8KLI-SET	1.800

Toggle clamp systainer STC-S-MFT

- Multi-functional systainer for installation technicians
- With wood insert including 20 holes
- And 3 different clamping options

Item number	Content	Weight
		kg
STC-S-MFT	4 x horizontal toggle clamp STC-HH50 / 2 x push-pull toggle clamp STC-IHH25 / 6 x adapter STC-SET-T20 / 2 x all-steel table clamp GTR12	5.710

Adapter for multifunction tables STC-SET-T20

- For using the BESSEY toggle clamps on multi-function tables such as Festool MFT and Sortimo WorkMo with hole diameter of 20 mm and plate thickness of min. 19 mm to max. 25 mm

Item number	Suitable for	Content	Weight
			kg
STC-SET-T20	STC-HH50 / STC-HH70 / STC-IHH25 / STC-VH50	1 x Cylindrical screw DIN 912 M 8 x 35 / 1 x Lock pin D 20 x 17 / 1 x Knurled nut M 8	0.090

STC accessory set for multifunction tables

- For using on multifunction tables such as Festool MFT and Sortimo WorkMo with hole diameter of 20 mm and plate thickness of min. 19 mm to max. 25 mm

Item number	Opening	Automatic adjustment	Clamping force	Content	Weight
	mm	mm	N		kg
STC-HH50-T20	40	35	2500	1 x STC-HH50 + 1 x STC-SET-T20	0.470
STC-HH70-T20	60	35	2500	1 x STC-HH70 + 1 x STC-SET-T20	0.510
STC-IHH25-T20	35	13	2500	1 x STC-IHH25 + 1 x STC-SET-T20	0.540
STC-VH50-T20	40	35	2500	1 x STC-VH50 + 1 x STC-SET-T20	0.520

Powerful gluing

FLEXIBLE AND POWERFUL IN PERFORMANCE

BESSEY's range of glue presses comprises three models: Firstly, there is the Pipe clamping set BPC. It is extremely variable as it is used in combination with a steel tube, the length of which is selected according to the desired clamping width. Secondly, the TB and TL Sash clamps are available in various openings from 0.6 to 2.5 meters. With the TB version, solid wood can be glued with a clamping force of up to 14,000 N.

Pipe clamping set BPC

- Suitable for steel pipes DN 20/R3/4" or DN 15/R1/2"
- Outer diameter 26.9 mm or 21.3 mm
- Infinitely-adjustable clamping width
- With stand

Order number	For pipes	For pipes	Throat depth	Weight
	mm	Inch	mm	kg
BPC-H12	21.3	1/2	40	0.880
BPC-H34	26.9	3/4	42	1.230

Sash clamps TB with T-profile 40 x 40 x 5 mm

- Clamping force up to 14,000 N
- With attached locking bolt
- Tommy bar
- Sturdy thanks to T-profile

Order number	Opening	Jaw dimensions	Weight
	mm	mm	kg
TB100	1000	66x43	5.070
TB120	1200	66x43	5.540
TB150	1500	66x43	6.025
TB210	2100	66x43	7.870
TB250	2500	66x43	9.430

Sash clamps TL, light with I-profile 37 x 11 x 4.5 mm

- Clamping force up to 9,900 N
- Easily adjustable pressure plates
- Crank handle
- Very sturdy thanks to I-profile

Order number	Opening	Jaw dimensions	Weight
	mm	mm	kg
TL60	600	48x53	3.780
TL90	900	48x53	4.800
TL120	1200	48x53	5.060
TL180	1800	48x53	7.100

For drywall construction and much more

ENORMOUSLY VERSATILE IN USE

BESSEY leaves nothing to be desired with its Telescopic drywall supports ST and STE. As well as fixing a wide range of building materials, they can also be used to partition off rooms, as simple burglar protection, to attach cat nets and even for building conservatories or carports. But that's not all. An extensive range of accessories offers many other possible uses for the supports, as they can be positioned anywhere in the room and fitted with a multi-functional bracket, for example. This makes the Telescopic drywall support indispensable helpers not only in drywall construction.

Extends with power

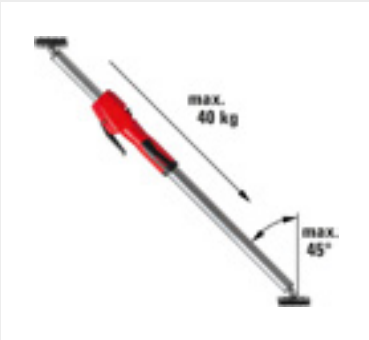

EXTREMELY SECURE HOLD

The support guarantees a reliable and secure hold:

- due to robust design ensures a max load of 350 kg can be applied (dependent upon the size of support and length applied)
- due to rubber TPU contact surfaces top and bottom (9 x 7 cm)
- due to anti-slip system integrated in the grip

QUICK AND ACCURATE HANDLING

The support can be precisely set to requirements, and safely released:

- due to fixing in three steps: In order to pre-set the telescopic drywall support press the release button and extend the telescopic inner tube to the desired length. Fine adjustment takes place by pressing the pump lever until the system plate of the support lies against the workpiece. Then turn the grip clockwise until the desired holding force is attained (observe the max. load-bearing capacity)
- due to releasing in two steps: First turn the telescopic drywall support anti-clockwise. As soon as no further holding force is present, press the release button to retract the inner tube.

Telescopic drywall support STE with pump grip

- Resilient up to a maximum of 3,500 N / 350 kg / 770 lbs when the telescopic rod is fully retracted
- Extremely stable construction due to highly durable steel pipes and non-slip TPU contact surfaces (9 x 7 cm)
- Single-handed operation thanks to 2-component plastic handle with pump mechanism
- Quick-slide button for rapid extension and retraction of the telescopic bar
- Controllable holding force by turning the support on the grip
- Application also on slopes due to continuously swivelling contact surfaces from -45° to +45°
- STE150, STE250, STE300, STE370: GS-certified for quality and safety

	Item number	Adjusting range	Load limit at max. extension length	Load limit at min. extension length	Weight
		mm	kg	kg	kg
NEW	STE55	400–550	350	350	1.420
	STE90	575–910	350	350	1.800
NEW	STE150	900–1500	210	350	2.290
	STE250	1450–2500	160	350	3.300
	STE300	1700–3000	110	350	3.800
	STE370	2070–3700	65	350	4.500

STE55 and STE90 are currently not GS certified.

*By unscrewing the upper and lower TPU contact surface, the „adjustment range" can be increased by up to 100 mm.

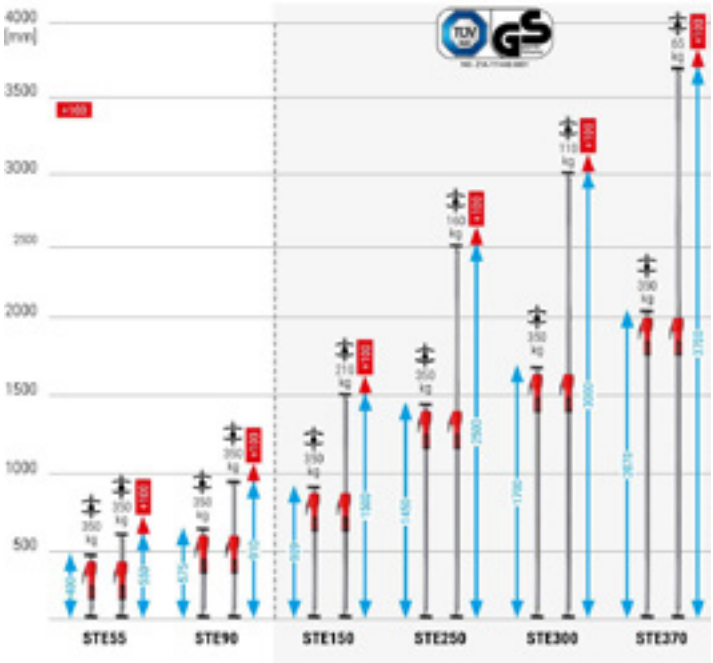

Provides real support during roof assembly

SECURE HOLD
Resilient and anti-slip, the support guarantees secure holding, even on sensitive surfaces:

- due to special steel pipes ensures a max load of 150 kg can be applied (dependent upon the size of support and length applied)
- due to additional locking of the release button
- due to rubber PVC contact surfa-ces top and bottom

EASY TO HANDLE HANDHABUNG
The support can be used quickly:

- due to the fixing in just two steps: The rough pre-setting is carried out using the telescoping and quickly locking inner pipe

Telescopic drywall support ST

- Resilient up to a maximum of 150 kg when the telescopic rod is fully retracted
- Stable construction due to special steel pipes and anti-slip PVC contact surfaces (8,5 x 6,5 cm)
- Application also on slopes due to continuously swivelable contact surfaces of -45° to +45°
- Easy, safe handling due to a telescoping and locking inner pipe as well as an outer pipe that can be turned by the foam grip
- GS-certified for quality and safety

Item number	Adjusting range	Load limit at max. extension length	Load limit at min. extension length	Weight
	mm	kg	kg	kg
ST125	750–1250–1250	60	150	1.410
ST250	1450–2500–2500	60	150	2.060
ST290	1600–2900–2900	50	150	2.240

Spare contact area

- Accessories for ST and STE

Item number	Width	Length	Weight	Content
	mm	mm	kg	
3101952	80	100	0.150	1 piece

Ceiling tripod attachment STE-DS

- Accessory for drywall supports with an outer diameter of the telescopic inner tube of 25 mm and 28 mm
- For increasing the support surface
- Even pressure thanks to the three-winged contact surfaces
- Quick, tool-free installation
- Safe to use as tipping of the contact surface is prevented by the all-round fixing of the steel pipe

Item number	Suitable for	Weight
		kg
STE-DS	ST, STE	0.420

Construction tripod STE-BS

- Accessory for drywall supports with an outer pipe diameter of 29 mm and 32 mm
- Stable stand as the force of the braced drywall support acts downwards in places
- Drywall supports can even be placed freely in the room without a top bracing and can therefore also be used outdoors
- Quick, tool-free installation
- Light and stable structure thanks to aluminium profiles and glass-fibre reinforced plastic

Item number	Suitable for	Weight
		kg
STE-BS	ST, STE	1.660

NEW Small construction tripod STE-KBS

- Accessory for STE55 telescopic support
- Accessory for STE90 telescopic support as a smaller, space-saving alternative to the larger construction tripod STE-BS
- Telescopic support can be positioned upright even when untensioned and pre-positioning is made easier
- Non-slip protective caps to protect sensitive surfaces
- Quick, tool-free assembly
- Light and stable construction thanks to reinforced PA6 plastic

Item number	Suitable for	Weight
		kg
STE-KBS	STE55 / STE90	0.270

NEW Large multifunction fixture STE-MH-SET

- Accessory for BESSEY telescopic supports STE (outer diameter 32 mm) and ST (outer diameter 29 mm)
- Fixture for the temporary assembly of partition walls and storage surfaces, e.g. tables, shelves
- Thanks to the 1/4" thread, also suitable for tools such as lasers (e.g. Stabila LAX 600G, Bosch GLL 3-80 CG), cameras and construction lights
- T-profile for the use of table clamps
- Quick, tool-free assembly
- Maximum load of 50 kg per fixture thanks to stable construction made of reinforced PA6 plastic and non-slip contact surface

Item number	Suitable for	Load limit per mount	Content	Weight
		kg		kg
STE-MH-SET	ST / STE	50	2 x Fixture	0.816

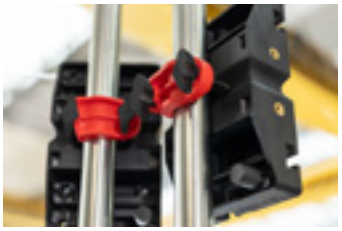

Multi-function/laser fixture STE-LH

- Accessory with 1/4" thread for holding a laser, camera etc
- Can be used without tools on round (0-45 mm) and angular (0-55 mm) support parts such as drywall supports, profiles, ladders
- L-shaped rotating fixture with 2 rotation axes: 360° next to fixing clamp, 180° at threaded connection

Item number	Length	Width	Height	Weight
	mm	mm	mm	kg
STE-LH	200	140	60	0.250

NEW Cross connector STE-CC-SET

- Accessory for telescopic supports with an outer tube diameter of 20 mm to 34 mm
- Can be used for fastening cross connections, such as tubes, and as a temporary suspension option, e.g. for lamps, bicycles, etc.
- 360° flexible pre-positioning, which is held securely thanks to the 16-step latching mechanism
- Maximum load of 30 kg per connector thanks to stable construction made of reinforced PA6 plastic and non-slip contact surface

Item number	Suitable for	Load limit per mount	Content	Weight
		kg		kg
STE-CC-SET	ST / STE	30	2 x Cross connector	0.678

Support plate STE-SP35

- Light aluminium profile with non-slip cellular rubber
- For increasing the support surface of BESSEY drywall supports ST (only in conjunction with replacement contact surface 3101952) and STE
- Application also on slopes due to continuously swivelling contact surfaces from -45° to +45°
- Secure fastening onto the contact surfaces thanks to star grip screws

Item number	Length	Width	Height	Weight
	mm	mm	mm	kg
STE-SP35	355	80	22	0.600

Combi-bag for drywall supports STE-BAG

- For convenient transport and protected storage of two BESSEY drywall supports STE300, STE370 and ST290 as well as accessories
- Comfortable thanks to the padded shoulder strap and the possibility to adjust the length of the bag to the drywall supports to be placed within
- Easy to use due to the long zip-up case and four exterior pockets for additional storage space
- Durable material

Item number	Suitable for	Weight
		kg
STE-BAG	STE300, STE370, ST290	0.920

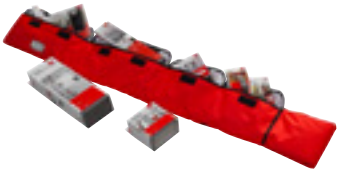

Bracing panel material

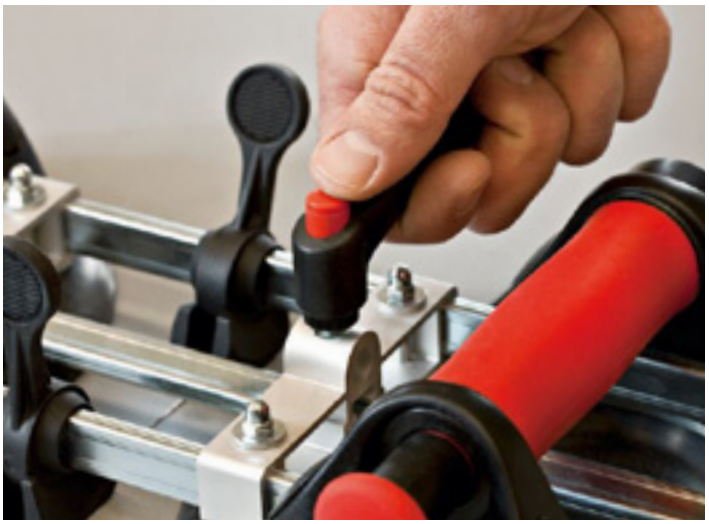

GLUEING THE FRONT OF THE PANELS

With its Seaming tools, BESSEY offers craftsmen an optimum solution for clamping and positioning large, even heavy components with a smooth surface. The range of materials includes ceramic, granite, Corian®, plastic, sheet metal, glass and even artificial stone. The panel clamps work via vacuum cups, which are connected by means of a spindle and two guide rods. Two levers, which are slidably arranged on the guide rods, can be used to compensate for height differences at the joint of the slabs. This allows perfect joints to be created at all angles and makes the installation of kitchen worktops and countertops as well as cladding and panels much easier and quicker.

Seaming tool PS130, big and strong

- For clamping and positioning large and potentially heavy components with a smooth surface, such as artificial stone, ceramic, granite, Corian®, plastic, sheet metal and glass
- Manual vacuum pumps for maximum suction power, and therefore a maximum level of horizontal clamping force up to 1,200 N
- Marking ring on the pump lever to permanently check for a reliable vacuum
- Practical quick adjustment function for rapid adjustment of the distance between the two suction cups

Order number	Opening	Width	Length	Weight
	mm	mm	mm	kg
PS130	5–130	215	715	4.080

Corian® is a registered trademark of DuPont

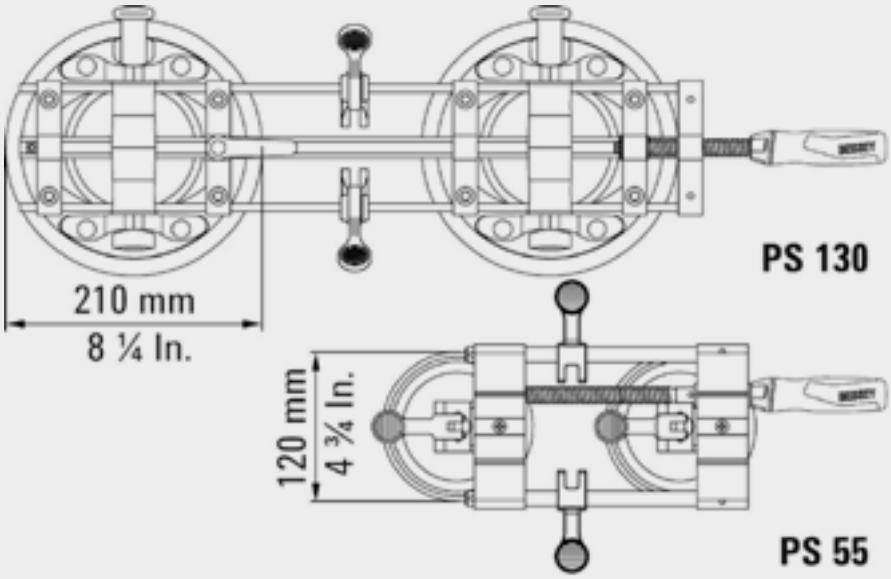

Seaming tool PS55

- For clamping and positioning components with a smooth surface, such as ceramic, granite, Corian®, plastic, sheet metal and glass, which require low clamping forces (up to 260 N)
- Clamping levers on the suction cups ensure rapid handling
- Cam lever to compensate for differing heights at the joint

Order number	Opening	Width	Length	Weight
	mm	mm	mm	kg
PS55	10–55	144	363	1.680

Corian® is a registered trademark of DuPont

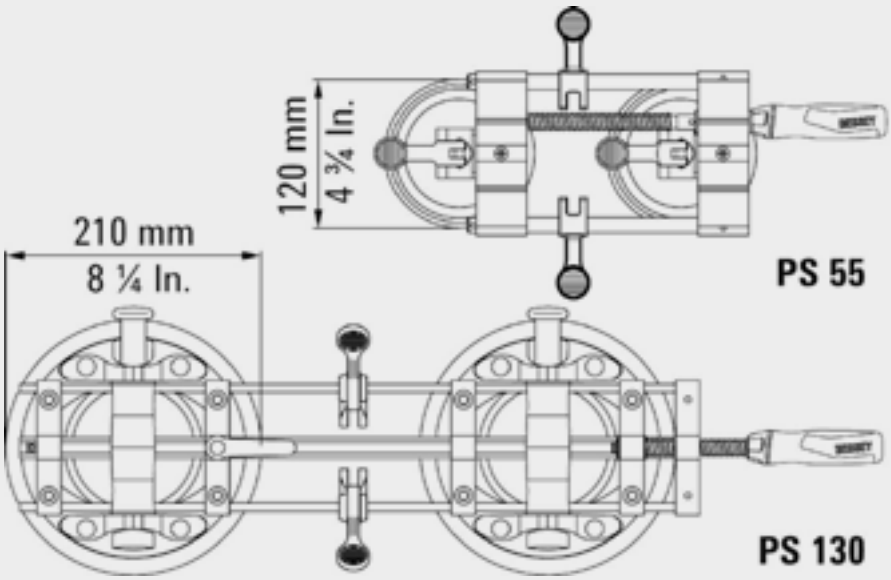

Installing door linings and windows

ASSEMBLY WITH A SYSTEM

The modern technique of installing door frames and windows using assembly foam requires special tools that enable precise alignment and support. BESSEY offers tools optimized for this purpose and a perfectly coordinated assembly system. For example, the TU Door frame clamp in combination with the TUX extension also enables the installation of extra-wide doors, as required for barrier-free construction. Linings fixed in the wall opening can be gently moved with the help of the TFM Door frame straightening clamp TFM – this prevents the decorative lining groove from being pressed or damage to finished wallpapered walls. In addition, door linings can be held and aligned horizontally and vertically at an exact 90° angle using the WTR Angle door frame straightening clamp.

Door frame clamp TU

- Gently and precisely braces and supports door casing during foam filling of wall joint
- Telescopic square anodised aluminium tubing with mm scale and adjusting screw for precision work
- Cross-shaped pressure plate with interchangeable clamping elements for frame depths of 6 to 13 cm or 13 to 30 cm
- Removable clamping bracket with increased clamping surfaces and removable brackets to insert the door frame securely and easily

Order number	Opening	Weight
	mm	kg
TU	565–1010	1.265

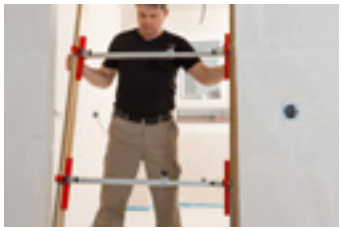

Door frame clamp set TU-TRAGE

- Gently and precisely braces and supports door casing during foam filling of wall joint
- Telescopic square anodised aluminium tubing with mm scale and adjusting screw for precision work
- Cross-shaped pressure plate with interchangeable clamping elements for frame depths of 6 to 13 cm or 13 to 30 cm
- Removable clamping bracket with increased clamping surfaces and removable brackets to insert the door frame securely and easily

Order number	Content	Weight
		kg
TU-TRAGE	6 (3 sets) Door frame clamps for a total of 3 doors	10.290

In a nylon wheeled case or safe and dustfree storage and for easy transport

Door frame brace extension TUX

- Accessories to increase the opening width of the TU door frame brace
- This enables extra-wide doors to be installed
- It can be used without tools in just a few steps

Order number	Opening	Weight
	mm	kg
TUX	1040–1960	0.370

Contents: 2 extension rods

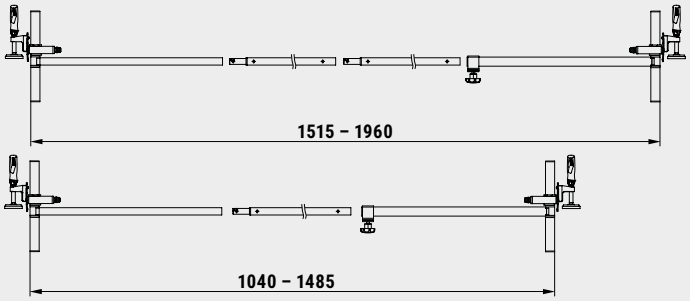

Door frame straightening clamp TFM

- For quick, precise aligning and fixing of door frames
- The intelligent companion for the BESSEY door frame clamp TU and TMS
- Useful addition to the BESSEY door chuck brace TU and TMS

Order number	Throat depth	Adjusting range	Weight
	mm	mm	kg
TFM-2K	70	35	0.580

Angle door frame straightening clamp WTR

- For neatly fixed and stabilised frame corners
- For mounting at a precise 90° angle

Order number	Opening	Adjusting range	Weight
	mm	mm	kg
WTR	8–30	32	1.120

Door frame assembly device TMS

- "Gently and precisely" braces and supports door casing during foam filling of wall joint
- Telescopic round aluminium tube with adjusting screw for precision work
- With clamping elements on the clamping faces in order to secure struts in frames and to hold them at precise distances

Order number	Opening	Weight
	mm	kg
TMS	560–1010	0.680

Window installation clamp FRK

- Permits rapid, precise straightening and fixing of window frames

Order number	Frame thicknesses	Adjusting range	Weight
	mm	mm	kg
FRK85	40–85	30	0.425

Laying parquet, laminate and boards

SIMPLE AND EFFICIENT TO USE

Floating floor coverings with tongue and groove, such as prefinished wood and cork parquet, laminate or boards, are all the rage. However, solid parquet that is glued to the floor is also very popular as a floor covering. BESSEY has special clamping tools in its range to make laying these various carpet and tile alternatives even easier and more efficient – e.g. the Spacer PVA or the Flooring and clamping system SVH. Thanks to the infinitely adjustable Spacer AV2, the correct distance from the wall can also be maintained. This leaves a sufficiently large expansion joint, which is later covered again by the skirting board.

Spacer AV2 (4 pcs./bag)

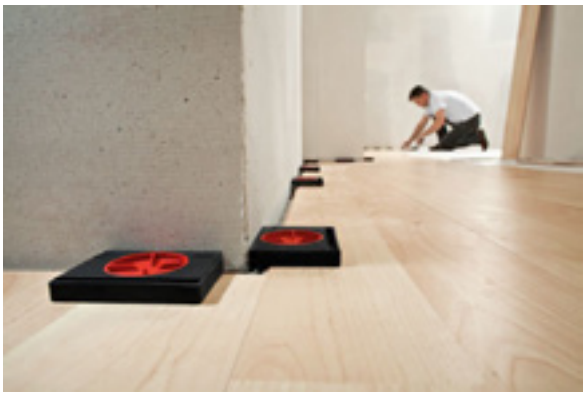

- Quickly and infinitely adjustable for wall distances of 5 to 20 mm
- Spacer for floating laminate and parquet flooring installations
- Wide contact and support area for avoiding pressure points on the floorboards and plaster
- Easy to remove by simply turning back
- Very light and compact

Order number	Opening	Jaw width	Adjusting range	Weight
	mm	mm	mm	kg
AV2	20	89	5–20	0.220

The spacer will be delivered in an attractive sales presenter. Available only in full pack quantities.

Spacer PVA

- Infinitely adjustable for wall distances of 7 to 35 mm
- Front and lateral support when gluing solid wood floorings
- Pull-down function dependent on the inclined angle of the spindle, with movable mounted pressure plate with protective cap
- Extra wide contact area of 130 mm prevents edge damage to the floorboards

Order number	Opening	Jaw width	Adjusting range	Weight
	mm	mm	mm	kg
PVA	35	130	7–35	0.475

Flooring and clamping system SVH/SVG

- For laying parquet, laminated and panel flooring
- SVH with spacer and band of high-strength polyester

Order number	Band	Opening	Tear proof	Weight
	mm	mm	N	kg
SVH400	25x1	4000	5000	0.750
SVH760	25x1	7600	5000	0.770
SVG	25x1	4000	2500	0.690

Additional use: can be used as lashing straps

Bulky loads transported with ease

CARRY PANELS MORE COMFORTABLY

Whether wood, plasterboard or plastic panels – the BESSEY Panel carrier holds them securely up to a weight of 75 kg. It can be freely positioned on boards with a thickness of 10 to 65 mm and is therefore always at the ideal gripping height for the user. Thanks to the sturdy cast tool body and the movable clamping jaws with a good grip rubber coating, panels are held securely in the panel holder. The large, easy-to-grip plastic handle sits comfortably in the hand and allows panels to be transported safely in an ergonomic posture. No workshop should be without this practical helper.

Panel carrier KFP

- Load-bearing capacity 75 kg
- For the safe lifting and carrying of panels such as wood sheets, chipboard panels, glass and plexiglass
- High-friction rubber coating on the moving clamping jaws

Order number	Opening	Weight
	mm	kg
KFP	10–65	0.731

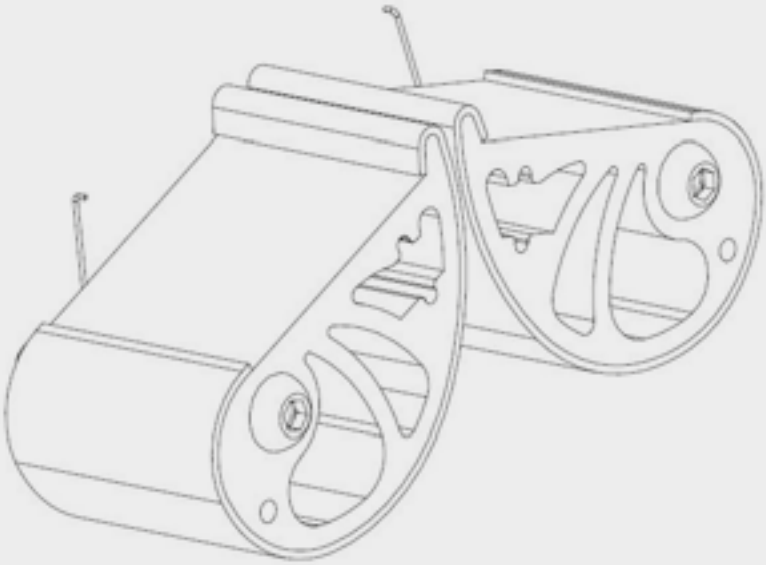

Always keep clamps to hand

THIS CREATES ORDER

A clamp trolley from BESSEY is ideal for storing clamps with different openings and projections. This is because the clamps can be sorted by size and hung on the sturdy metal construction with castors. The mobile clamp trolley also allows you to work more flexibly and quickly, as the clamps in the workshop can be clearly arranged and ready to hand directly at the place of use. However, a clamp trolley is not only a practical aid in the workshop. It can also provide dealers with excellent support when displaying the clamps in the store.

Clamp trolley ZW1

- Stable metal construction on castors
- Dimensions 50 x 60 x 146 cm
- Holds up to 90 clamps
- Malleable cast iron-, all-steel- and lever clamps with clamping ranges between 120 and 600 mm
- With label and label holder
- Suitable as sales aid and for the workshop area

Order number	Layout	Weight
		kg
ZW1	Unstocked	15.000
ZW1-A01	All-steel screw clamps 5 x GZ12, 5 x GZ16, 5 x GZ20, 5 x GZ25, 5 x GZ30, 3 x GZ40, 2 x GZ50, 2 x GZ60, 1 x GH16, 1 x GH20	57.000
ZW1-A01-2K	All-steel screw clamps 2K 5 x GZ12-2K, 5 x GZ16-2K, 5 x GZ20-2K, 5 x GZ25-2K, 5 x GZ30-2K, 3 x GZ40-2K, 2 x GZ50-2K, 2 x GZ60-2K, 1 x GH16, 1 x GH20	57.000
ZW1-A99-2K	Malleable cast iron screw clamps 2K 5 x TG12-2K, 5 x TG16-2K, 5 x TG20-2K, 5 x TG25-2K, 5 x TG30-2K, 3 x TG40-2K, 2 x TGK50-2K, 2 x TGK60-2K, 1 x GZ16-2K, 1 x GZ20-2K	65.000

Clamp trolley ZW2

- Stable metal construction on castors
- Dimensions 100 x 60 x 153 cm
- Holds up to 120 clamps, it even holds long screw clamps
- Malleable cast iron and all-steel with clamping ranges between 200 and 2000 mm
- With label and label holder
- Suitable as sales aid and for the workshop area

Order number	Layout	Weight
		kg
ZW2	Unstocked	33.000
ZW2-A99	Malleable cast iron screw clamps 10 x TG20, 10 x TG25, 5 x TG30, 5 x TG40, 5 x TGK60, 3 x TGK80, 2 x TGK100, 2 x TGK125, 2 x TGK150, 2 x TGK200, 2 x GZ20, 2 x GZ25	154.300
ZW2-A99-2K	Malleable cast iron screw clamps 2K 10 x TG20-2K, 10 x TG25-2K, 5 x TG30-2K, 5 x TG40-2K, 5 x TGK60-2K, 3 x TGK80-2K, 2 x TGK100-2K, 2 x TGK125-2K, 2 x TGK150-2K, 2 x TGK200-2K, 2 x GZ20-2K, 2 x GZ25-2K	154.300

CUTTING TOOLS.

Our extensive Erdi range of cutting tools offers solutions for a wide variety of requirements. Whether thick or thin sheet metal, straight cuts or curves – BESSEY has the right shears for every task. In addition to classic standard snips, we also offer lever-action snips that reduce the force required for cutting by around 25 percent. Both types of shears are available in different versions, including straight-cut shears for straight cuts, figure-cut shears for curved cuts and ideal shears that can cut both exact straight lines and curves. Our left and right cutting shears are ideal for curved cuts in either direction. Our impressive selection of tin snips is rounded off by special cutting tools such as cutter knives and tools for the tinsmith trade.

LEXICON

1. Types

Standard tin snips

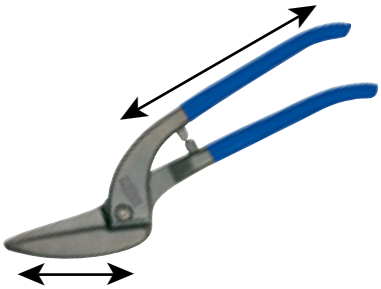

In standard tin snips, edges and handle are traditionally forged into one unit. The force required for cutting is determined by the ratio of edge length to the handle length.

Compound leverage snips

Compound leverage snips comprise a cutter head and a handle. The compound action produces additional leverage.

2. Models

Shape and straight cutting snips

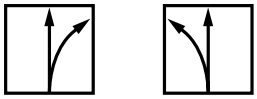

Shape and straight cutting snips are real „all-rounders". They can cut through a metal sheet (straight-cut) as well as cut large and small contours or radii (outlinecut). In this case, it does not matter whether you are cutting at the edge (edge cut) or at the centre of a sheet. You can naturally use shape and straight cutting snips for notching-operations.

Shape cutting snips

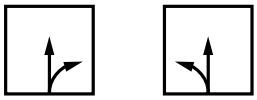

Shape cutting snips are best suited when you want fine and narrow radius cuts near the edges of a metal sheet. You can use the delicately shaped edge of these snips to cut extremely narrow shapes or curves without any problem.

Straight cutting snips

Do you wish to cut a metal sheet at the centre and/or near the edges? Then the perfect tool for you is the straight cutting snips. You can use long edges of this tool to cross-cut and notch large metal sheets quickly and precisely with less effort.

3. Right cutting or left cutting snips. What is the difference?

Left cutting snips | Right cutting snips

Right cutting snips are sharpened and designed so that they can cut right radii (i. e. a curve from **left to right**) easily. Left cutting snips are the best for radius cuts **from right to left**.

The common perception is that, right cutting snips are for right-handers, and left cutting snips for left-handers. This is not true. In fact, it is the other way round. If you, a right-hander, are cutting a radius (see above, **from left to right**), using right cutting snips, you have to cut outwards from your wrist. With left cutting snips, (radius is then **from right to left**) you can cut inwards from your wrist. This is considerably more ergonomic. Try it out once!

LEXICON

4. Grades

The service life of edges depends directly on the grades of steel used and processing. High-performance snips with case-hardened HSS-edges particularly fulfill the most stringent requirements regarding the service life and consistent cutting performance. Cutter heads of the HSS-TiN grade are additionally coated with extremely hard titanium nitride that reduces wear and tear. Other cutting materials, namely special high quality steel, high quality steel and standard quality steel, are available depending on the application and the frequency of use.

Quality of steel	min. hardness Rockwell C	Durability
HSS-TiN	65	+ + + + +
HSS	65	+ + + +
Special high quality	61	+ + +
High quality steel	59	+ +
Standard quality steel	56	+

Continuous, straight and curved cuts, right

Continuous, straight and curved cuts, left

Short, straight and narrow curved cuts, right

Short, straight and narrow curved cuts, left

Straight and curved cuts with a large radius in both left and right directions

Continuous, straight cuts

Short, straight cuts, notch

Circular cuts

L = Left cut design
(refer to page 2 as well)

Standard tin snips with a rocker spring, available on request for an extra charge.

The high quality of the steel at the cutting edge leads to a much longer service life of the snips.

Quality of steel	For maximum sheet thickness at the tensile strength of:			
Normal metal snips	400 N/mm²	600 N/mm²	800 N/mm²	1100 N/mm²
HSS D407..; D416..; D418..;	1.2 mm	1.0 mm	0.8 mm	0.6 mm
High quality steel D202..; D206..; D207..; D208..; D214..; D216..; D218..;	1.2 mm	1.0 mm	0.8 mm	--
Standard quality steel D102..; D106..; D107..; D114..; D116..; D118..; D146..; D159..; D70..-D77..; D122N; D122A	1.2 mm	1.0 mm	0.8 mm	--

Quality of steel	For maximum sheet thickness at the tensile strength of:			
Hand snips with leverage	400 N/mm²	600 N/mm²	800 N/mm²	1100 N/mm²
HSS-TiN D27AH-TiN*	1.5 mm	1.2 mm	1.0 mm	0.8 mm
HSS D27AH*	1.5 mm	1.2 mm	1.0 mm	0.8 mm
Special high quality steel D17ASS D29SS*; D29ASS*; D29BSS*; D39ASS* D15A	2.0 mm 1.5 mm 1.2 mm	1.5 mm 1.2 mm 1.0 mm	1.2 mm 1.0 mm 0.8 mm	--
High quality steel D08..; D16..; D17A; D22A D27*; D27A*; D27B*	1.5 mm	1.2 mm	1.0 mm	--

*** Snips can be stressed for up to 3 x 0.6 mm (1.8 mm) for a short period of time for cutting the seams.**

Caution! Manual sheet metal snips may only be used to cut thin sheets of soft metals and steel. They are not suitable for cutting through round or rectangular section metal shapes such as wires for example.

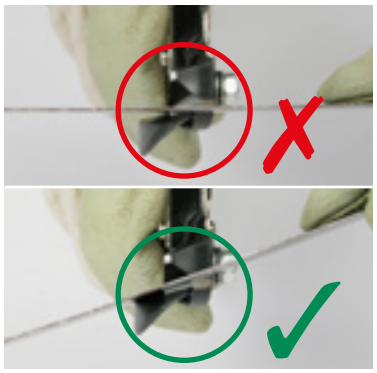

Low-fatigue working with little effort

THE POWER OF THE LEVER

The drop-forged snip heads are always hardened and tempered and the cutting edges are also induction-hardened. This ensures a long service life and burr-free cuts. The ergonomic handle has a plastic coating and anti-slip protection as standard. Both parts are articulated to provide additional leverage. Cutting work can be carried out with very little effort and little fatigue. But that's not all. The latest generation of lever-operated snips, the Shape and straight cutting snips D39ASS, have even more to offer – improved ergonomics and durability. To achieve this, the handle opening has been reduced with virtually no loss of cutting length, the locking bolt is positioned centrally, the snip head has a more compact design and a sintered steel insert has been integrated to prevent friction in the trade.

Low-fatigue continuous cutting

FRICTIONLESS ROBUST
The shape and straight cutting snips D39ASS are particularly smooth running and extremely wear-resistant:
- due to sintered steel insert in the joint area
- due to permanent threaded connection of the joint area with stable stud bolt
- due to stainless steel panel over the joint for protecting the spring beneath

PERFECT CORNERING
They enable high-precision cutting of curves in the tightest of radii and, with less risk of scratching the surface:
- due to extremely compact cutter head with partially sunken threaded head connection

EFFORT-SAVING
It is possible to use the complete cutting length with every cut:
- due to a significantly reduced handle opening angle

EASY TO USE
Right and left-handed users can lock and unlock the snips with ease, without a change in grip.
- due to central positioning of the latch on the top handle

Shape and straight cutting snips

- For continuous, straight and curved cuts
- Extremely compact cutter head with a partially countersunk head screw connection for increased manoeuvrability and precision for curved cuts
- Joint area screwed connection with stud bolt, sintered disc and maintenance-free spring for extreme robustness
- Reduced handle opening angle for optimised handling and an even cutting length
- Central latch for easy operation without having to change your grip
- Available in right or left cutting versions

Order number	Overall length	Overall length	Blade length	Blade length	Product life expectancy	Weight
	mm	Inch	mm	Inch		kg
D39ASS	230	9	30	1 3/16	+++	0.490
D39ASSL	230	9	30	1 3/16	+++	0.490
D39ASS-SB	230	9	30	1 3/16	+++	0.500
D39ASSL-SB	230	9	30	1 3/16	+++	0.500

Shape and straight cutting snips

- ERGO-handle for increased comfort – reduced hand fatigue!
- For continuous, straight and curved cuts
- Compact cutter head: High manoeuvrability for shape cutting
- Optimised leverage ratio: 25 % less effort
- Optimised edge shape: No slipping even without serrations
- Available in right or left cutting versions

Item number	Overall length	Overall length	Blade length	Blade length	Sheet thickness (600 N/mm²)	Product life expectancy	Weight
	mm	Inch	mm	Inch	mm		kg
D29ASS-2	260	10 1/4	33	1 5/16	1.2	+++	0.508
D29ASSL-2	260	10 1/4	33	1 5/16	1.2	+++	0.508
D29ASS-2-SB	260	10 1/4	33	1 5/16	1.2	+++	0.508
D29ASSL-2-SB	260	10 1/4	33	1 5/16	1.2	+++	0.508

Set of shape and straight cutting snips

- For continuous, straight and shaped cuts
- Compact cutter head: High manoeuvrability for shape cutting
- ERGO-handle for increased comfort – reduced hand fatigue!
- D29ASS-2: Optimised leverage ratio: 25 % less effort, optimised edge shape: No slipping even without serrations
- D15A: The extremely small forged heads have optimized blade geometry is very manoeuvrable

Order number	Layout	Weight
		kg
DSET29-15	1 x D29ASS-2, 1 x D29ASSL-2 and 1 x D15A in snips pouch	1.290

Shape cutting snips

- ERGO-handle for increased comfort – reduced hand fatigue!
- For short, straight and curved cuts
- Edges with micro-serrations for slip-proof working
- Available in right or left cutting versions

Order number	Overall length	Overall length	Blade length	Blade length	Sheet thickness (600 N/mm²)	Product life expectancy	Weight
	mm	Inch	mm	Inch	mm		kg
D29SS-2	260	10 1/4	40	1 9/16	1.2	+++	0.490
D29SSL-2	260	10 1/4	40	1 9/16	1.2	+++	0.490

Straight cutting snips

- ERGO-handle for increased comfort – reduced hand fatigue!
- For continuous, straight cuts
- Edges with micro-serrations for slip-proof working
- Available in right or left cutting versions

Order number	Overall length	Overall length	Blade length	Blade length	Sheet thickness (600 N/mm²)	Product life expectancy	Weight
	mm	Inch	mm	Inch	mm		kg
D29BSS-2	260	10 1/4	33	1 5/16	1.2	+++	0.520
D29BSSL-2	260	10 1/4	33	1 5/16	1.2	+++	0.520

Shape and straight cutting snips

- For continuous, straight and curved cuts
- Edges with micro-serrations for slip-proof working
- Available in right or left cutting versions

Order number	Overall length	Overall length	Blade length	Blade length	Sheet thickness (600 N/mm²)	Product life expectancy	Weight
	mm	Inch	mm	Inch	mm		kg
D27A	260	10 1/4	33	1 5/16	1.2	++	0.560
D27AL	260	10 1/4	33	1 5/16	1.2	++	0.560
D27A-SB	260	10 1/4	33	1 5/16	1.2	++	0.572
D27AL-SB	260	10 1/4	33	1 5/16	1.2	++	0.572

Shape cutting snips

- For short, straight and curved cuts
- Edges with micro-serrations for slip-proof working
- Available in right or left cutting versions

Order number	Overall length	Overall length	Blade length	Blade length	Sheet thickness (600 N/mm²)	Product life expectancy	Weight
	mm	Inch	mm	Inch	mm		kg
D27	260	10 1/4	40	1 9/16	1.2	++	0.490
D27L	260	10 1/4	40	1 9/16	1.2	++	0.490

Straight cutting snips

- For continuous, straight cuts
- Edges with micro-serrations for slip-proof working
- Available in right or left cutting versions

Order number	Overall length	Overall length	Blade length	Blade length	Sheet thickness (600 N/mm²)	Product life expectancy	Weight
	mm	Inch	mm	Inch	mm		kg
D27B	260	10 1/4	32	1 5/16	1.2	++	0.560
D27BL	260	10 1/4	32	1 5/16	1.2	++	0.560

Shape and straight cutting snips, robust

- For continuous, straight and curved cuts
- Edges with micro-serrations for slip-proof working
- Exceptionally robust: Drop-forged handles
- Painted handles
- Available in right or left cutting versions

Order number	Overall length	Overall length	Blade length	Blade length	Sheet thickness (600 N/mm²)	Product life expectancy	Weight
	mm	Inch	mm	Inch	mm		kg
D17ASS	240	9 1/2	24	1	1.5	+++	0.545
D17ASSL	240	9 1/2	24	1	1.5	+++	0.545
D17A	240	9 1/2	24	1	1.2	++	0.545
D17AL	240	9 1/2	24	1	1.2	++	0.545

Shape and straight cutting snips, manoeuvrable

- Special flat cutter head enables cutting in narrowest radius
- For continuous, straight and curved cuts
- Edges with micro-serrations for slip-proof working
- Available in right or left cutting versions

Order number	Overall length	Overall length	Blade length	Blade length	Sheet thickness (600 N/mm²)	Product life expectancy	Weight
	mm	Inch	mm	Inch	mm		kg
D08	230	9	27	1 1/16	1.2	++	0.380
D08L	230	9	27	1 1/16	1.2	++	0.380
D08-SB	230	9	27	1 1/16	1.2	++	0.390
D08L-SB	230	9	27	1 1/16	1.2	++	0.390

Shape and straight cutting snips MULTISNIP Longstyle

- For long continuous straight and large radius cuts
- Extra long cutting blades, laterally displaced for continous cuts
- Available only in left cutting version

Order number	Overall length	Overall length	Blade length	Blade length	Sheet thickness (600 N/mm²)	Product life expectancy	Weight
	mm	Inch	mm	Inch	mm		kg
D22A	280	10 1/2	64	2 1/2	1.2	++	0.425
D22A-SB	280	11	64	2 1/2	1.2	++	0.445

Aviation snips

- For short, straight and curved cuts
- Edges with micro-serrations for slip-proof working
- Left cut model available as well

Order number	Overall length	Overall length	Blade length	Blade length	Sheet thickness (600 N/mm²)	Product life expectancy	Weight
	mm	Inch	mm	Inch	mm		kg
D16	240	9 1/2	35	1 3/8	1.2	++	0.375
D16-SB	240	9 1/2	35	1 3/8	1.2	++	0.393

Aviation snips

- For short, straight and curved cuts
- Edges with micro-serrations for slip-proof working
- Right cut model available as well

Order number	Overall length	Overall length	Blade length	Blade length	Sheet thickness (600 N/mm²)	Product life expectancy	Weight
	mm	Inch	mm	Inch	mm		kg
D16L	240	9 1/2	35	1 3/8	1.2	++	0.380
D16L-SB	240	9 1/2	35	1 3/8	1.2	++	0.393

Aviation snips

- No offset to blades, for short, straight and curved cuts with a large radius in both left and right directions
- Edges with micro-serrations for slip-proof working
- Available only in left cutting version

Order number	Overall length	Overall length	Blade length	Blade length	Sheet thickness (600 N/mm²)	Product life expectancy	Weight
	mm	Inch	mm	Inch	mm		kg
D16S	240	9 1/2	38	1 1/2	1.2	++	0.380
D16S-SB	240	9 1/2	38	1 1/2	1.2	++	0.393

Set of aviation snips

- Edges with micro-serrations for prevent slipping
- D16/D16L: For short, straight and curved cuts
- D16S: No offset to blades, for short, straight and curved cuts with a large radius in both left and right directions

Order number	Layout	Weight
		kg
DSET16	1 x D16, 1 x D16L and 1 x D16S in snips pouchn snips pouch	1.231

Technology instead of size

COMPACT IN DESIGN – STRONG IN PERFORMANCE

The Shape and straight cutting snips D15A developed by BESSEY impress with their high performance in a uniquely compact design. Extremely small snip head with optimized cutting edge geometry and perfected lever ratios with significantly reduced overall length – outstanding features that make cutting the tightest radii and in hard-to-reach places much easier. To put it in a nutshell: The D15A from BESSEY is small, maneuverable and strong. This makes it an indispensable all-rounder that can be easily stowed in any jacket or folding rule pocket and should not be missing in any tool bag.

Shape and straight cutting snips, small and manoeuvrable

- For continuous, straight and curved cuts
- The extremely small forged heads have optimized blade geometry is very manoeuvrable
- Optimized leverage ratio with smallest design guarantees 100 % performance with low force input
- ERGO handle for low-fatigue work
- Right or left cutting available

Order number	Overall length	Overall length	Blade length	Blade length	Sheet thickness (600 N/mm²)	Product life expectancy	Weight
	mm	Inch	mm	Inch	mm		kg
D15A	180	7	20	13/16	1	+++	0.184
D15AL	180	7	20	13/16	1	+++	0.184
D15A-SB	180	7	20	13/16	1	+++	0.200
D15AL-SB	180	7	20	13/16	1	+++	0.200

The shape and straight cutting snips D15A and D15AL will be delivered in an attractive sales presenter. Sale to dealers in packaging units only.

Set of shape and straight cutting snips

- For continuous, straight and curved cuts
- The extremely small forged heads have optimized blade geometry is very manoeuvrable
- Optimized leverage ratio with smallest design guarantees 100 % performance with low force input
- ERGO handle for fatigue-free work
- Right or left cutting available

Order number	Layout	Weight
		kg
DSET15	1 x D15A, 1 x D15S and 1 x D15AL in snips pouchin snips pouch	0.610

The best solution for every application

GUARANTEED BEST STEEL QUALITY

High-performance snips with HSS cutting edges meet the highest demands – both in terms of service life and cutting performance. The excellent steel quality ensures that high-performance snips with HSS cutting edges always perform better in direct comparison with conventional snips.

Their use has often paid off, especially with stainless steel sheets. High-performance snips with HSS cutting edges are available for all areas of application and in all snip variants – from figure snips to ideal snips, as standard sheet metal snips or with lever transmission.

HSS-TiN shape and straight cutting snips

- TiN coated cutter head for longer service life even in case of hard materials
- Case-hardened HSS edges
- For continuous, straight and curved cuts
- Available in right or left cutting versions

Order number	Overall length	Overall length	Blade length	Blade length	Sheet thickness (600 N/mm²)	Product life expectancy	Weight
	mm	Inch	mm	Inch	mm		kg
D27AH-TIN	260	10 1/4	33	1 5/16	1.2	+++++	0.560
D27AHL-TIN	260	10 1/4	33	1 5/16	1.2	+++++	0.560

HSS shape and straight cutting snips

- For continuous, straight and curved cuts
- Edges made of case-hardened HSS
- Available in right or left cutting versions

Order number	Overall length	Overall length	Blade length	Blade length	Sheet thickness (600 N/mm²)	Product life expectancy	Weight
	mm	Inch	mm	Inch	mm		kg
D27AH	260	10 1/4	33	1 5/16	1.2	+++++	0.560
D27AHL	260	10 1/4	33	1 5/16	1.2	+++++	0.560

HSS punch snips

- For short, straight and curved cuts
- Edges made of case-hardened HSS
- PVC dipped handles
- Available in right or left cutting versions

Order number	Overall length	Overall length	Blade length	Blade length	Sheet thickness (600 N/mm²)	Product life expectancy	Weight
	mm	Inch	mm	Inch	mm		kg
D407-275	275	11	42	1 5/8	1	++++	0.530
D407-275L	275	11	42	1 5/8	1	++++	0.530
D407-300	300	12	43	1 11/16	1	++++	0.600
D407-300L	300	12	43	1 11/16	1	++++	0.600

HSS shape and straight cutting snips

- For continuous, straight and curved cuts
- Cutting edges made of case-hardened HSS
- PVC dipped handles
- Available in right or left cutting versions

Order number	Overall length	Overall length	Blade length	Blade length	Sheet thickness (600 N/mm²)	Product life expectancy	Weight
	mm	Inch	mm	Inch	mm		kg
D416-280	280	11	34	1 3/8	1	++++	0.610
D416-280L	280	11	34	1 3/8	1	++++	0.610

HSS pelican snips

- For long continuous and straight cuts
- Cutting edges made of case-hardened HSS
- PVC dipped handles
- Available only in right cutting version

Order number	Overall length	Overall length	Blade length	Blade length	Sheet thickness (600 N/mm²)	Product life expectancy	Weight
	mm	Inch	mm	Inch	mm		kg
D418-300	300	12	62	2 7/16	1	++++	0.710
D418-350	350	14	65	2 9/16	1	++++	0.800

The stable all-rounder

PROVEN, ROBUST AND RELIABLE

Standard plate snips are a real classic when it comes to robustness and reliability. Regardless of the application or material: the wide product and performance range of standard plate snips always offers the right cutting edge shape and quality. Completely forged, extremely robust and absolutely reliable.

Shape and straight cutting snips

- For continuous, straight and curved cuts
- D216 – Painted handles
- D116 – PVC dipped handles
- Available in right or left cutting versions

Order number	Overall length	Overall length	Blade length	Blade length	Sheet thickness (600 N/mm²)	Product life expectancy	Weight
	mm	Inch	mm	Inch	mm		kg
D216-260	260	10 1/4	30	1 3/16	1	++	0.490
D216-260L	260	10 1/4	30	1 3/16	1	++	0.490
D216-280	280	11	34	1 3/8	1	++	0.580
D216-280L	280	11	34	1 3/8	1	++	0.580
D116-260	260	10 1/4	30	1 3/16	1	+	0.490
D116-260L	260	10 1/4	30	1 3/16	1	+	0.490
D116-260-SB	260	10 1/4	30	1 3/16	1	+	0.490
D116-260L-SB	260	10 1/4	30	1 3/16	1	+	0.490
D116-280	280	11	34	1 3/8	1	+	0.560
D116-280L	280	11	34	1 3/8	1	+	0.560
D116-280-SB	280	11	34	1 3/8	1	+	0.590
D116-280L-SB	280	11	34	1 3/8	1	+	0.590

Set of standard tin snips

- D216: For continuous, straight and curved cuts, painted handles
- D218: For long, straight and continuous cutting, extra long blade is ideal for cutting through metal sheets

Order number	Layout	Weight
		kg
DSET-SF3	1 x D216-280, 1 x D216-280L and 1 x D218-300 in snips pouch	2.019

Shape and straight cutting snips, without opening stop

- For continuous, straight and curved cuts
- With no opening stop and with extra pointed cutter head
- Edges with micro-serrations for slip-proof working
- Particularly robust, for unusually challenging situations: Snips completely tempered and burnished. Cutter inductively hardened
- PVC dipped handles
- Available in right or left cutting versions

Order number	Overall length	Overall length	Blade length	Blade length	Sheet thickness (600 N/mm²)	Product life expectancy	Weight
	mm	Inch	mm	Inch	mm		kg
D216-280-B-SBSK	280	11	34	1 3/8	1	++	0.580
D216-280L-B-SBSK	280	11	34	1 3/8	1	++	0.580

Pelican snips

- For long continuous and straight cuts
- Extra long blade is ideal for cutting through metal sheets
- D218 – Painted handles
- D118 – PVC dipped handles
- Available as right cutter (in 300 mm dimension also available as left cutter)

Order number	Overall length	Overall length	Blade length	Blade length	Sheet thickness (600 N/mm²)	Product life expectancy	Weight
	mm	Inch	mm	Inch	mm		kg
D218-300	300	12	62	2 7/16	1	++	0.730
D218-300L	300	12	62	2 7/16	1	++	0.730
D218-350	350	14	65	2 9/16	1	++	0.800
D118-300	300	12	62	2 7/16	1	+	0.730
D118-300L	300	12	62	2 7/16	1	+	0.730
D118-300-SB	300	12	62	2 7/16	1	+	0.740
D118-300L-SB	300	12	62	2 7/16	1	+	0.740
D118-350	350	14	65	2 9/16	1	+	0.800

Shape cutting punch snips

- For short, straight and curved cuts (especially small radii)
- Very slick cutting head
- D214 – Painted handles
- D114 – PVC dipped handles
- Available in right or left cutting versions

Order number	Overall length	Overall length	Blade length	Blade length	Sheet thickness (600 N/mm²)	Product life expectancy	Weight
	mm	Inch	mm	Inch	mm		kg
D214-250	250	10	37	1 7/16	1	++	0.470
D214-250L	250	10	37	1 7/16	1	++	0.470
D114-250	250	10	37	1 7/16	1	+	0.470
D114-250L	250	10	37	1 7/16	1	+	0.470

Punch snips

- For short, straight and curved cuts
- D207 – Painted handles
- D107 – PVC dipped handles
- Available in right or left cutting versions

Order number	Overall length	Overall length	Blade length	Blade length	Sheet thickness (600 N/mm²)	Product life expectancy	Weight
	mm	Inch	mm	Inch	mm		kg
D207-250	250	10	42	1 5/8	1	++	0.490
D207-250L	250	10	42	1 5/8	1	++	0.490
D207-275	275	11	42	1 5/8	1	++	0.530
D207-275L	275	11	42	1 5/8	1	++	0.530
D207-300	300	12	47	1 7/8	1	++	0.580
D207-300L	300	12	47	1 7/8	1	++	0.580
D107-250	250	10	42	1 5/8	1	+	0.490
D107-250L	250	10	42	1 5/8	1	+	0.490
D107-250-SB	250	10	42	1 5/8	1	+	0.500
D107-250L-SB	250	10	42	1 5/8	1	+	0.500
D107-275	275	11	42	1 5/8	1	+	0.550
D107-275L	275	11	42	1 5/8	1	+	0.550
D107-300	300	12	47	1 7/8	1	+	0.600
D107-300L	300	12	47	1 7/8	1	+	0.600

Punch snips with curved blades

- Especially for circular cuts
- Semi-circular edges
- Painted handles
- Available in right or left cutting versions

Order number	Overall length	Overall length	Blade length	Blade length	Sheet thickness (600 N/mm²)	Product life expectancy	Weight
	mm	Inch	mm	Inch	mm		kg
D208-275	275	11	40	1 9/16	1	++	0.510
D208-275L	275	11	40	1 9/16	1	++	0.510

Universal snips

- For straight and curved cuts
- PVC dipped handles
- Available only in right cutting version

Order number	Overall length	Overall length	Blade length	Blade length	Sheet thickness (600 N/mm²)	Product life expectancy	Weight
	mm	Inch	mm	Inch	mm		kg
D106-250-SB	250	10	68	2 11/16	1	+	0.440

Universal snips with wide blade

- For straight and curved cuts (large radii)
- PVC dipped handles
- Available only in right cutting version

Order number	Overall length	Overall length	Blade length	Blade length	Sheet thickness (600 N/mm²)	Product life expectancy	Weight
	mm	Inch	mm	Inch	mm		kg
D106A-250-SB	250	10	67	2 5/8	1	+	0.460

Berlin pattern snips

- For straight cuts
- D202 – Painted handles
- D102 – PVC dipped handles
- Available only in right cutting version

Order number	Overall length	Overall length	Blade length	Blade length	Sheet thickness (600 N/mm²)	Product life expectancy	Weight
	mm	Inch	mm	Inch	mm		kg
D202-250	250	10	60	2 3/8	1	++	0.465
D202-300	300	12	79	3	1	++	0.695
D102-250	250	10	60	2 3/8	1	+	0.480
D102-250-SB	250	10	60	2 3/8	1	+	0.490
D102-300	300	12	79	3	1	+	0.720

American pattern snips

- For straight cuts
- Available only in left cutting version
- PVC dipped handles

Order number	Overall length	Overall length	Blade length	Blade length	Sheet thickness (600 N/mm²)	Product life expectancy	Weight
	mm	Inch	mm	Inch	mm		kg
D146-200	200	8	41	1 5/8	1	+	0.317
D146-250	250	10	54	2 1/3	1	+	0.470
D146-300	300	12	68	2 11/16	1	+	0.667
D146-350	350	14	72	2 13/16	1	+	0.748

The universally applicable MULTI-talent

UNIVERSAL PERFORMANCE AND APPLICATION SPECTRUM

Whether at home, in the workshop or in the garden – the compact combi snips are simply universal. Always and everywhere. They are ideal for both hard materials such as thin sheet metal and soft materials such as cardboard, fabric and paper. The convenient features of the Combi snips are complemented by the stainless steel blades and the ergonomically shaped plastic handles with soft material inserts and anti-slip protection.

Strong multi-purpose cutters D52-2

- Cutting edge and handle forged in one piece for high stability
- Edges with serrations for slip-proof working
- ERGO-handle for increased comfort – reduced hand fatigue!
- Blades are sandblasted and chromium-plated for corrosion protection
- Cuts cold-rolled steel up to 0.6 mm thick

Order number	Overall length	Overall length	Blade length	Blade length	Weight
	mm	Inch	mm	Inch	kg
D52-2	200	8	53	2 3/16	0.266

Multi-purpose cutters

- ERGO-handle for increased comfort – reduced hand fatigue!
- Stainless steel blades

Order number	Overall length	Overall length	Blade length	Blade length	Weight
	mm	Inch	mm	Inch	kg
D47-2	140	5 1/2	31	1 1/4	0.052
D48-2	190	7 1/2	42	1 5/8	0.110

Angled combi snips

- ERGO-handle for increased comfort – reduced hand fatigue!
- Stainless steel blades
- Offset blades

Order number	Overall length	Overall length	Blade length	Blade length	Weight
	mm	Inch	mm	Inch	kg
D48A-2	190	7 1/2	36	1 3/8	0.110

Cable cutters

- ERGO-handle for increased comfort – reduced hand fatigue!
- For multicore cables with diameter up to 10 mm
- Stainless steel blades

Order number	Overall length	Overall length	Weight
	mm	Inch	kg
D49-2	165	6 1/2	0.115

Multi-purpose cutters

- Stainless steel blades
- Edges with serrations for slip-proof working

Order number	Overall length	Overall length	Blade length	Blade length	Weight
	mm	Inch	mm	Inch	kg
D47	140	5 1/2	31	1 1/4	0.077
D48	190	7 1/2	42	1 5/8	0.120

Angled combi snips

- ERGO-handle for increased comfort – reduced hand fatigue!
- Offset blades
- Edges with serrations for slip-proof working

Order number	Overall length	Overall length	Blade length	Blade length	Weight
	mm	Inch	mm	Inch	kg
D48A	190	7 1/2	38	1 1/2	0.110

Cable cutters

- For multicore cables with diameter up to 10 mm
- Stainless steel blades

Order number	Overall length	Overall length	Weight
	mm	Inch	kg
D49	160	6 1/4	0.115

Multi-purpose cutters MULTISNIP Master

- For long continuous straight and curved cuts
- All metal parts are made of stainless steel
- Handle made of robust fibreglass-reinforced plastic with a soft material insert

Order number	Overall length	Overall length	Blade length	Blade length	Sheet thickness (600 N/mm²)	Weight
	mm	Inch	mm	Inch	mm	kg
D51A	235	9 1/4	50	2	0.4	0.190

Multi-purpose cutters Combinox

- Stainless steel blades
- Ergonomically designed handles with soft-insert
- With wire guide for cutting binding wire to Ø 2.5 mm
- Circular cutting to stop for stripping cable from Ø 1.0 to 1.5 mm

Order number	Overall length	Overall length	Blade length	Blade length	Weight
	mm	Inch	mm	Inch	kg
D50	190	7 5/8	40	2	0.140

The versatile helpers

THERE'S A LOT IN IT

The folding utility knives in the DBK series from BESSEY inspire DIY enthusiasts and professionals alike. They are available in three handle variants: plastic, wood and aluminum. The blade can be quickly replaced or exchanged to work on a different material. Cutting carpet, cardboard, hose, plastic or linoleum is therefore very easy. A release lever allows the locking blade to be quickly retracted after processing. Versatile, high-quality workmanship and space-saving – this naturally also applies to the DBST multi-tool from BESSEY. It offers extra-large scissors with a cutting length of 55 mm. This makes it easy to cut a wide range of materials and, with six other tools, enables flexible application options.

Folding utility knife with ABS handle

- Comfortable plastic handle
- Thumb cushion for max. contact pressure
- Blade compartment with 5 replacement blades included
- Quick blade exchange
- Belt clip

Order number	Overall length	Overall length	Blade length	Blade length	Weight
	mm	Inch	mm	Inch	kg
DBKPH-EU	160	6 1/4	28	1 1/8	0.180

All knives will be delivered in an attractive sales presenter. Sale to dealers in packaging units only.

Knife set DBKPH-SET

- Knife with comfortable plastic handle
- Practical nylon zip-up case
- Four different blades for different tools

Order number	Layout	Weight
		kg
DBKPH-SET	DBKPH Folding locking utility knife with convenient nylon storage case + 15 pc. Standard blade DBK-T + 5 pc. Hook blade DBK-H + 2 pc. Linoleum blade DBK-L + 2 pc. Scoring blade DBK-A	0.560

The knife-set will be delivered in an attractive sales presenter. Sale to dealers in packaging units only.

Folding utility knife with wooden handle

- High quality wooden handle
- Quick blade exchange
- Belt clip

Order number	Overall length	Overall length	Blade length	Blade length	Weight
	mm	Inch	mm	Inch	kg
DBKWH-EU	160	6 1/4	28	1 1/8	0.200

All knives will be delivered in an attractive sales presenter. Sale to dealers in packaging units only.

Folding utility knife with aluminium handle

- Light weight aluminium handle
- Quick blade exchange
- Belt clip

Order number	Overall length	Overall length	Blade length	Blade length	Weight
	mm	Inch	mm	Inch	kg
DBKAH-EU	160	6 1/4	28	1 1/8	0.140

All knives will be delivered in an attractive sales presenter. Sale to dealers in packaging units only.

Spare blades

- Suitable for all BESSEY bladed folding utility knives

Order number	Overall length	Overall length	Content	Weight
	mm	Inch	Pc	kg
DBK-T	60	2 3/8	10	0.052
DBK-H	50	2	10	0.046
DBK-L	87	3 1/2	5	0.070

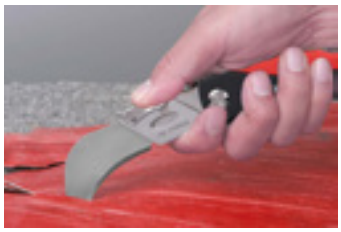

Multitool

- 1 Multitool with 7 options: Shears, blade, saw, file, Phillips head screwdriver and large and small slotted screwdriver
- Cuts: Leather, rope, vinyl, thin cable, cord, thin plastic, paper and much more besides
- With a robust belt pouch for secure, it provides handy storage
- Stainless steel handle with soft cushioned elements for slip-free work

Order number	Overall length open	Overall length open	Overall length closed	Overall length closed	Blade length	Blade length
	mm	Inch	mm	Inch	mm	Inch
DBST	175	7	100	4	55	2 3/16

The Multitool will be delivered in an attractive sales presenter. Sale to dealers in packaging units only.

High-precision cutting

BEST BESSEY QUALITY WITH MAXIMUM PRECISION

BESSEY has more than 80 years of experience in the manufacture of tin snips. We traditionally incorporate this unique know-how into all our products. You also benefit from our unique expertise and wide range of variants in the field of goldsmith snips and sheet metal snips. Because the best quality pays off again and again, especially where the highest precision is required!

Jewellers' snips

- Closed handles
- Completely nickel coated

Order number	Overall length	Overall length	Blade length	Blade length	Version	Weight
	mm	Inch	mm	Inch		kg
D70-1	180	7	31	1 1/4	straight edges	0.125
D71-1	175	7	32	1 1/4	curved edges	0.125

Jewellers' snips

- Open handles
- Completely nickel coated

Order number	Overall length	Overall length	Blade length	Blade length	Version	Weight
	mm	Inch	mm	Inch		kg
D72-1	180	7	31	1 1/4	straight edges	0.110

Jewellers‘ snips

- With handle loops
- Completely nickel coated

Order number	Overall length	Overall length	Blade length	Blade length	Version	Weight
	mm	Inch	mm	Inch		kg
D74-1	180	7	34	1 3/8	straight edges	0.090
D75-1	175	7	33	1 5/16	curved edges	0.090

Jewellers‘ snips

- Closed handle with spring
- Completely nickel coated

Order number	Overall length	Overall length	Blade length	Blade length	Version	Weight
	mm	Inch	mm	Inch		kg
D76-1	180	7	26	1	straight edges	0.140

For so much in the household

WHAT EVERYONE SHOULD HAVE

In its range of cutting tools, BESSEY also offers snips specifically for household use. They are suitable for a variety of tasks, such as cutting paper, packaging, fabrics, yarn and other lightweight materials. In addition to the classic sewing, wallpapering and work snips, there are also multi-purpose snips that have comfortable handles with soft material inserts.

Multi-purpose shears

- Stainless steel blades
- Comfortable handles loops with soft cushion inserts
- Oblong and round handle loops

Order number	Overall length	Overall length	Blade length	Blade length	Weight
	mm	Inch	mm	Inch	kg
D820-200	200	7 7/8	80	3 1/3	0.070
D820-250	250	10	105	4 1/4	0.100

Multi-purpose shears

- Stainless steel blades
- Comfortable handles loops with soft cushion inserts

Order number	Overall length	Overall length	Blade length	Blade length	Weight
	mm	Inch	mm	Inch	kg
D821-160	160	6 1/4	70	2 3/4	0.035
D821-180	180	7	80	3 1/3	0.060

Electricians‘ scissors

- Nickel plated serrated blades
- With a wire cutter

Order number	Overall length	Overall length	Blade length	Blade length	Weight
	mm	Inch	mm	Inch	kg
D53	125	5	40	1 9/16	0.065

Household and dressmakers‘ shears

- Completely nickel coated

Order number	Overall length	Overall length	Blade length	Blade length	Weight
	mm	Inch	mm	Inch	kg
D840-150	150	6	50	2	0.065
D840-180	180	7	77	3	0.085

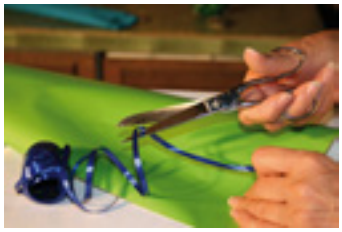

Paperhangers‘ and paper shears

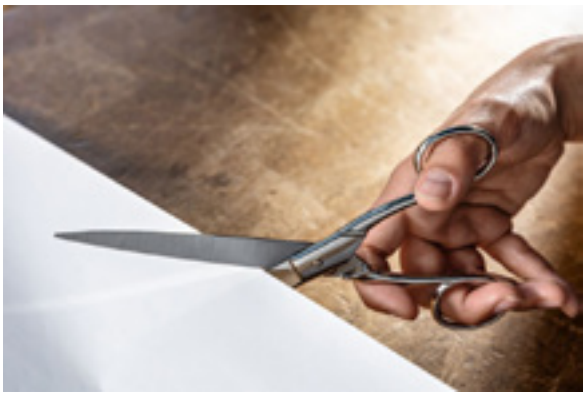

- Completely nickel coated

Order number	Overall length	Overall length	Blade length	Blade length	Weight
	mm	Inch	mm	Inch	kg
D853-200	200	8	95	3 3/4	0.080

Industrial and professional shears

- Robust design
- Black handle
- Oblong and round handle loops

Order number	Overall length	Overall length	Blade length	Blade length	Weight
	mm	Inch	mm	Inch	kg
D860-200	200	8	80	3 1/3	0.200
D860-225	225	9	85	3 1/4	0.270
D860-250	250	10	90	3 1/2	0.330

Cutting steel strips

SAFE – WITH JUST ONE HAND!

The BESSEY cutting technology range also includes 3 specialists for cutting through steel straps, such as those used for strapping wooden crates. With the D123S, BESSEY offers something very special here – the only one-handed steel safety strap cutter that can even cut through hardened steel straps of 32 x 1 mm. With an overall length of just 260 mm, they are very short and therefore light and easy to handle. The snip head has a flat shape and can be easily slid under tightly tensioned straps. During cutting, a holding-down element relaxes the strap and prevents it from springing up dangerously. So when it comes to safe handling with just one hand, the D123S is simply better.

Safety strap cutter with compound leverage

- One-handed operation with little effort thanks to double leverage
- Metal fastening will not spring up dangerously due to safety hold mechanism in the snip
- Flat lower jaw easily slips under taut banding
- Can even be used with hardened steel belts (560 N/mm²) with belt widths up to 32 mm, belt thicknesses up to 1 mm
- Induction hardened cutting edge for a long service life
- ERGO-handle for increased comfort – reduced hand fatigue!

Order number	Overall length	Overall length	Blade length	Blade length	Weight
	mm	Inch	mm	Inch	kg
D123S	260	10 1/4	38	1 1/2	0.545
D123S-SB	260	10 1/4	38	1 1/2	0.560

Steel strap cutter

- The lower holder prevents band ends from springing up
- For band width up to 25 mm, band thickness up to 0.6 mm
- Flat lower jaw easily slips under taut banding
- Painted handles

Order number	Overall length	Overall length	Blade length	Blade length	Weight
	mm	Inch	mm	Inch	kg
D122N	225	9	31	1 1/4	0.400

Steel strap cutter

- Flat lower jaw easily slips under taut banding
- High price to performance ratio
- For band width up to 25 mm, band thickness up to 0.6 mm
- PVC dipped handles

Order number	Overall length	Overall length	Blade length	Blade length	Weight
	mm	Inch	mm	Inch	kg
D122A	260	10 1/4	30	1 3/16	0.415
D122A-SB	260	10 1/4	30	1 3/16	0.430

Special tools for specialists

DEVELOPED BY CUTTING TECHNOLOGY PROFESSIONALS

As a specialist, we know what specialists value: Highest quality and maximum reliability. The Tools for sheet metal work and plumbing from BESSEY offer you both. Drop-forged from quality steel, they are also characterized by their robustness and durability. They can withstand even the toughest demands and will never let you down. That's why they should definitely not be missing from your range!

Seaming and clinching pliers

- Forged in quality steel
- Black powder coated
- Minimum jaw depth straight 60 mm
- Minimum jaw depth bent 50 mm

Order number	Overall length	Overall length	Form	Pivot screw version	Jaw width	Weight
	mm	Inch			mm	kg
D33-60	280	11	straight	passed through	60	0.600
D331-40	280	11	straight	put on	40	0.560
D331-60	280	11	straight	put on	60	0.630
D331-80	320	12 3/4	straight	put on	80	0.920
D34-60	270	10 3/4	45° bent	passed through	60	0.720
D341-40	270	10 3/4	45° bent	put on	40	0.690
D341-60	270	10 3/4	45° bent	put on	60	0.630
D341-80	320	12 3/4	45° bent	put on	80	0.920
D35-60	255	10	90° bent	passed through	60	0.710
D351-60	255	10	90° bent	put on	60	0.670

Seaming and clinching pliers, PVC-coated handle

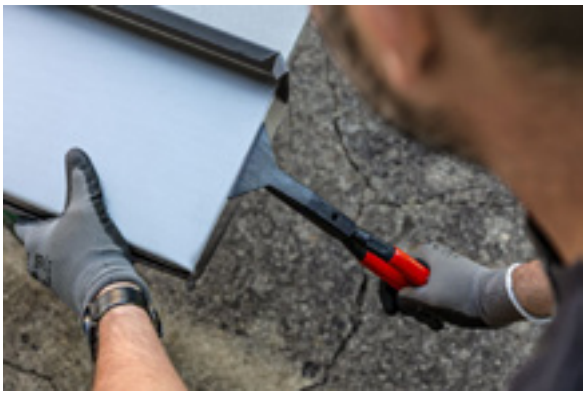

- Forged in quality steel
- Black powder coated
- PVC-coated handle
- Minimum jaw depth straight 60 mm
- Minimum jaw depth bent 50 mm

Order number	Overall length	Overall length	Form	Pivot screw version	Jaw width	Weight
	mm	Inch			mm	kg
D33-60-P	280	11	straight	passed through	60	0.600
D331-60-P	280	11	straight	put on	60	0.620
D34-60-P	270	10 3/4	45° bent	passed through	60	0.638
D341-60-P	270	10 3/4	45° bent	put on	60	0.630
D35-60-P	255	10	90° bent	passed through	60	0.710
D351-60-P	255	10	90° bent	put on	60	0.670

Mini-folding pliers

- For small and precise seaming – and bending operations
- Forged from quality steel
- PVC-coated handles
- Completely hardened
- Jaw depth straight 30 mm
- Jaw depth bent 28 mm

Order number	Overall length	Overall length	Form	Pivot screw version	Jaw width	Weight
	mm	Inch			mm	kg
D331-22	180	7	straight	put on	22	0.210
D341-22	180	7	45° bent	put on	22	0.215

Flat-nosed pliers for sheet metal work

- Forged from quality steel
- PVC-coated handles
- Flat jawed pliers
- Jaw depth 45 mm
- Serration every 0.8 mm

Order number	Overall length	Overall length	Pivot screw version	Weight
	mm	Inch		kg
D301	240	9 1/2	put on	0.400

Round nosed pliers

- Forged from quality steel
- PVC-coated handles
- Round jawed pliers
- Jaw depth 50 mm
- Serration every 1 mm

Order number	Overall length	Overall length	Pivot screw version	Weight
	mm	Inch		kg
D311	260	10 1/4	put on	0.380

Folding pliers

- Forged from quality steel
- Bronzed
- PVC-coated handles

Order number	Overall length	Overall length	Form	Pivot screw version	Jaw width	Weight
	mm	Inch			mm	kg
D355	250	10	straight	put on	30	0.430

Corner seaming and clinching pliers

- Forged from quality steel
- Bronzed
- PVC-coated handles
- Jaw depth 65 mm

Order number	Overall length	Overall length	Form	Pivot screw version	Jaw width	Weight
	mm	Inch			mm	kg
D335	280	11	straight	put on	60	0.740

Squeeze folding pliers

- Forged in quality steel
- Burnished
- PVC-coated handles
- Jaw depth 80 mm

Order number	Overall length	Overall length	Form	Pivot screw version	Jaw width	Weight
	mm	Inch			mm	kg
D336	320	12 3/4	straight	passed through	80	0.780

Crimper

- 3 bottom- and 2 top jaws enable quick and efficient work
- Self-opening
- 2-component plastic handle
- Jaw depth 40 mm

Order number	Overall length	Overall length	Weight
	mm	Inch	kg
D36	273	10.75	0.520

Gutter support bowing pliers

- 10 mm recess width for gutter irons up to 40 x 6 mm
- Head made of rust-proof malleable cast iron
- Gliding role for protecting the plastic-coated gutter irons

Order number	Overall length	Overall length	Weight
	mm	Inch	kg
D396	680	20	3.100

BESSEY

BESSEY Tool GmbH & Co. KG ▪ Mühlwiesenstraße 40
74321 Bietigheim-Bissingen, Germany
Fon +49 7142 401-0 ▪ Fax +49 7142 401-452
E-Mail: tool-info@bessey.de ▪ www.bessey.de